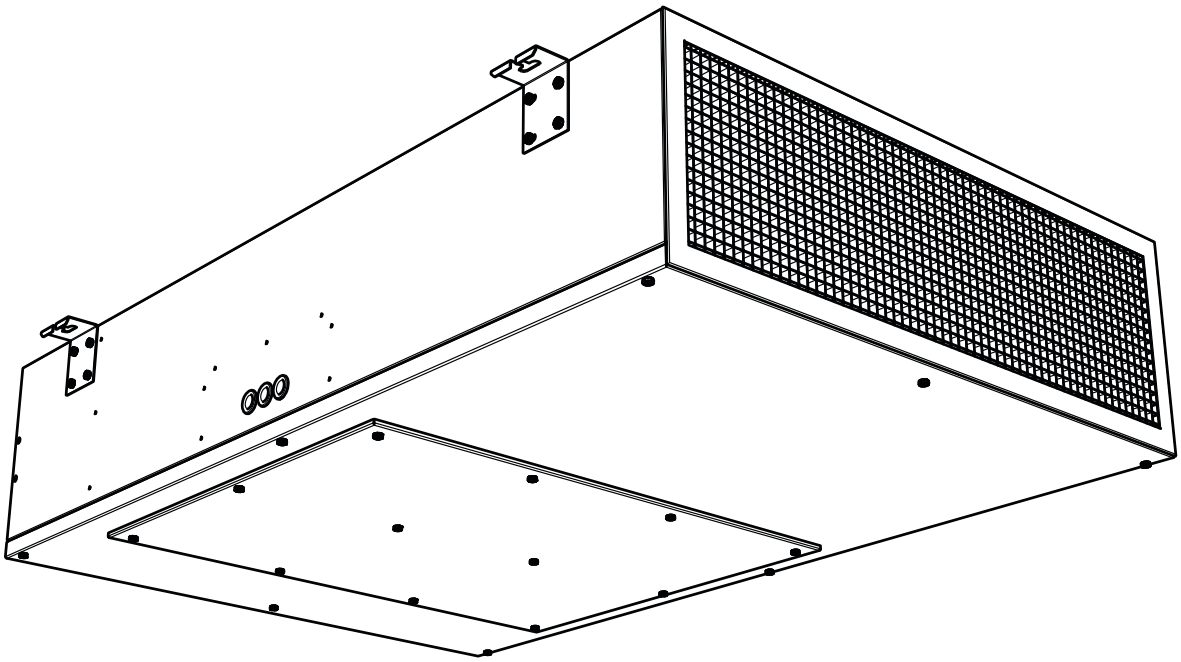

ecovent®

Hybrid Extract Unit

Operation & Maintenance Manual

VES

Eagle Close, Chandlers Ford Industrial Estate, Chandlers Ford, Eastleigh, Hampshire, SO53 4NF

Tel: +44 (0) 2380 46 11 50 email: info@ves.co.uk web: www.ves.co.uk

VES Ref. ID.1594
Issue C
May 2024
Original Instructions

Conventions

Important **This manual must be read in full before Installation, Operation and Maintenance of the units supplied**

Please ensure that this document is passed to the end user. This manual forms an integral part of the product and should be kept for the working life of the product. Additional copies of this and supporting documents are available by contacting VES or by visiting **www.ves.co.uk** and following the 'Download O & M's' link.

The following symbols used within this document refer to potential dangers, advice for safe operation or important points of reference

Warning Indicates hazards associated with electric current and high voltages

Caution Indicates hazards that require safety advice for personnel or potential unit/property damage

Important Indicates important information

Contents

Introduction

1 **Ecovent® EVHE** is a extract ventilation unit specifically designed for use in science and practical spaces. It has an optimised duty of up to 0.278m³/s, with a further boost capacity of 0.45m³/s in line with the requirements of BB101. Each unit is suitable for ceiling void, plantroom or internal locations only.

Important As standard **Ecovent® EVHE** extract units are only avaliable as a slave unit and are required to be paired/connected to a master hybrid supply unit or similar in order to operate correctly.

As standard, each unit will have been supplied with a pre-wired terminal panel unless specified at the time of order. The standard operating temperature of these units is -20 to +35 °C.

For further technical details regarding dimensions and weights, contact VES on **023 8046 1150**, quoting the sales order (SO) number and the unit type as found on the unit nameplate, or alternatively visit **www.ves.co.uk**.

Nomenclature 2

Part Number Coding

	Point Description	Point Variants	Details (as appropriate)
1	Product	**EV**	Ecovent® Heat Recovery Units
2	Unit type	**HE**	Hybrid Extract Ventilation Units
3	Unit Size	**1, 2**	Sequential see unit outline for details
4	Fan Type	**7**	Centrifugal EC fan
5	Fan Size	**5**	Sequential
6	Phase	**-1**	230V 50Hz Single Phase
7	Casework Lining	**Null**	Standard
		/A1	Variant (sequential)
8	Main Filter	**Null**	No filter
9	Control Panel Section	**Null**	No Controls
		/SV01	Fitted termination panel (slave)
		/SV02	Fitted termination panel (slave) V2
10	Connection	**/GL**	Extract Grilles
		/SP	Ø250mm Room Spigots
11	Colour	**Null**	Galvanised finish
		/R9010	RAL Colour as specified
12	Finish	**MT**	Matt
		SG	Semigloss
		FG	Full Gloss
		LT	Leatherette
13	Powder Coat Type	**Null**	As colour
14	Variation	**/0001**	Sequential

Typical Example EVHE175-1/SV01/GL/R9010SG/0253

EV	HE	1	7	5	-1		/SV01	/GL	/R9010	SG	/0253
1	2	3	4	5	6	7	8	9	10	11	12	13	14

Receipt of Goods and Handling

3 Immediately upon receipt of goods, check for possible damage in transit paying particular attention to fan impellers, coil connections and unit casing. Prior to installation please check to ensure alignment and smooth rotation of the impeller after transit. Also check to ensure that any ancillary items are included. These will normally be supplied fitted or, in the case of small items, taped to the unit.

In the event of any damage having occurred or if any item is found to be missing, it is essential to inform VES Andover Ltd. within **7 days** of delivery quoting sales order number and the unit type, as found on the unit nameplate. After this period, VES is unable to accept any claim for damaged or missing goods.

Installation

4 The entire system must be considered for safety purposes. It is the responsibility of the installer to ensure that all of the equipment is installed in compliance with the manufacturer's recommendations, with due regard to the current HEALTH AND SAFETY AT WORK ACT and conforms to all relevant statutory regulations.

Where a unit is installed such that component failure could result in injury to personnel, precautions should be taken to prevent such an injury. If the unit is installed where there is a reasonable possibility of persons or objects coming into contact with the impeller whilst operational, a guard should be fitted or steps taken to prevent this. It is the installer's responsibility to ensure that access panels are not obstructed in any way. Safe working access for maintenance must be provided in accordance with Health and Safety and Building Regulations. For confirmation of required access please see the appropriate unit outline drawing.

For safe maintenance, consideration must also be given by the installer for adequate illumination of the unit location. Further consideration should be given to the unit's position and secured into place as appropriate.

Caution ⚠ Mounting hangers, door furniture, isolators etc. extend beyond the casework, so are vulnerable to accidental damage. Take necessary precautions so as not to cause damage whilste handling the unit.

The weight of each unit/section is specified on the outline drawing and the total unit weight will be displayed on the unit inspection label. When lifting the unit using a fork lift truck ensure the whole unit is supported by the full length of the forks. It may be necessary to use fork extensions to fully support the unit. The centre of gravity may be offset from the centre of the unit; this needs to be taken into consideration when lifting the unit.

Fork Lifting Detail
Fig. 1

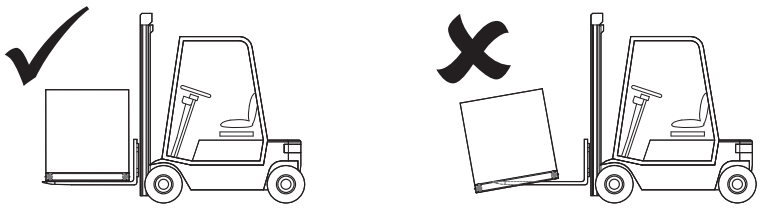

Caution ⚠ Handle with care. Failure to fully support the unit during lifting may result in damage to the unit casework

Lifting Detail
Fig. 2

Units are to be rigged and lifted using spreaders, taking into account the weight of the unit. Lifting gear should be arranged so as not to bear on the casework, see right.

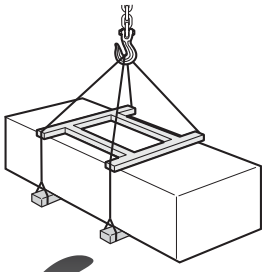

Installation 4 *Continued*

Ecovent® EVHE units are supplied with hangers suitable for drop-rod or ceiling-void mounting, in bottom access orientation, with airflow in the horizontal plane.
For alternative mounting please consult your outline drawing as supplied with the unit, or refer to VES Customer Services for further information.

Secure drop rods/unit with the appropriate fixings as shown below 3.

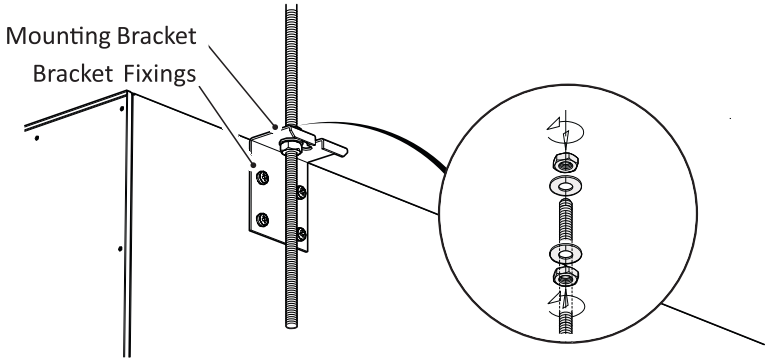

Unit mounting detail
Fig. 3

Important !

When hanging units from drop-rods, ensure that the load is evenly spread and that **ALL** brackets are used within the support. Ensure that the drop rod/fixing used is selected appropriately to accommodate the load of the unit.

Ecovent® EVH units are intended to be connected to a wall or window-mounted louvre. This can be a direct connection (from unit to louvre) or via a specific transition duct.

For units mounted flush against wall openings, a finishing flange is available to assist with this. Ensure that the joint between unit and wall is sealed correctly. The flange is handed; ensure the widest part is toward the bottom of the unit see fig. 4

Finishing Flange detail
Fig. 4

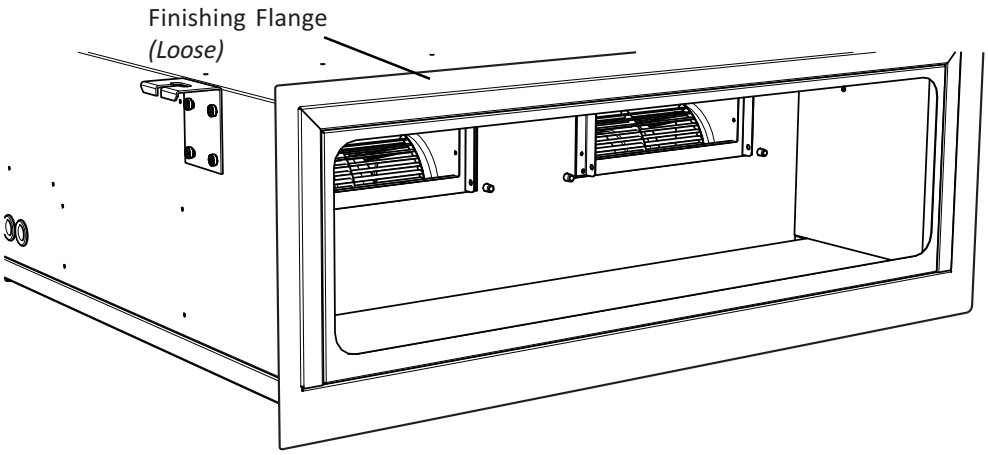

Installation 4 *Continued*

Typical installation detail (plan view)

Fig. 5

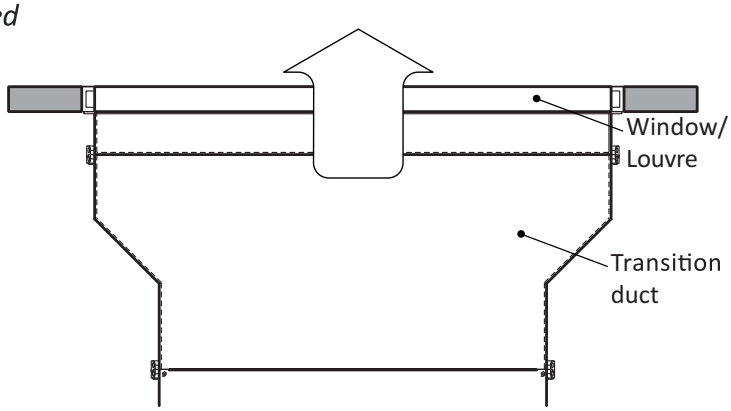

Duct transitions and plenum boxes allow for resizing and/or realignment as required and should be sized to match both unit and louvre connections. A pair of joining brackets per section (one each side) are provided to assist with the duct connection.
The example shown in fig. 6 below depicts a two-part transition/plenum, each section having its own set of joining brackets.

Typical transition assembly detail

Fig. 6

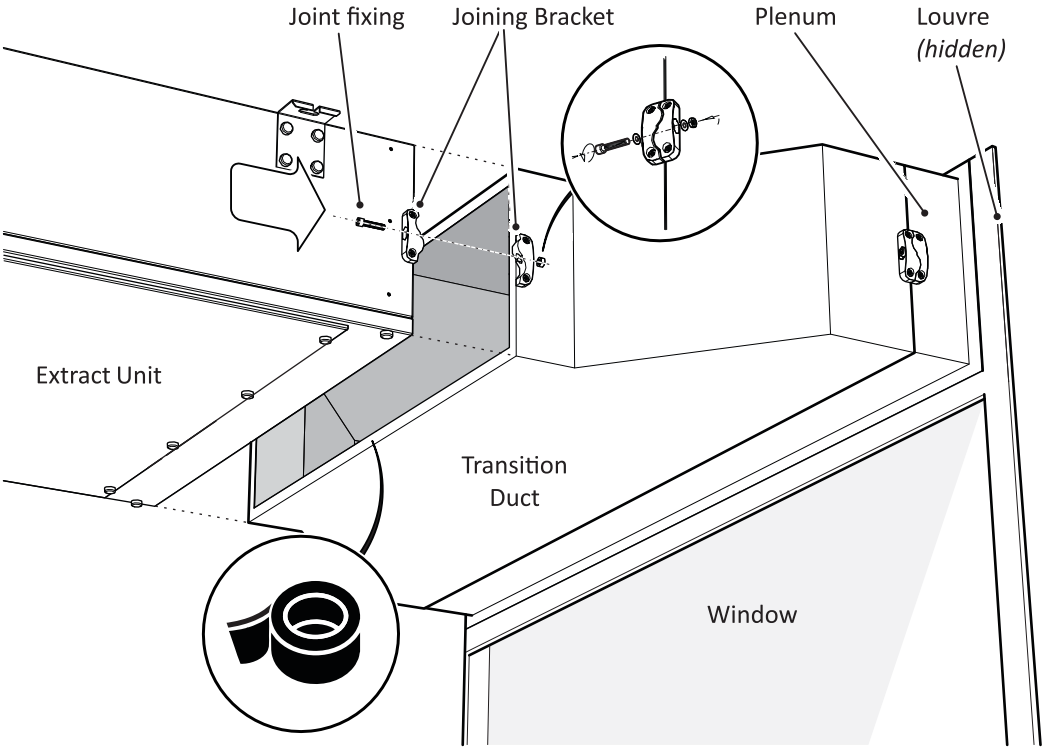

Fix the bracket parts to both sides of unit and transition as shown using the M6 fixings provided. Tape the joint using self-adhesive rubber tape prior to assembly to prevent air leakage.
To finish the assembly, bring the sections together and install the M8 joint fixings through both parts of each joining bracket and tighten using a 6mm hex key, drawing the sections together evenly, ensuring no visible gaps.

Important The nut is loose but held within the bracket body. Take care not to dislodge when fixing.

Caution Flange connections and channels are **NOT** structural and are included as part of the unit sealing only. When moving assembled units ensure that **ALL** sections are fully supported.

Standard Wiring and Fan Installation 5

Warning

The electrical supply **must be fully isolated** before attempting to affect any work on this unit. All electrical connections to any unit must be carried out in accordance with the current edition of the I.E.T Regulations, only competent Electricians should be allowed to affect any electrical work to our units.

Important

A cable entry point is provided at the control section.
It is the responsibility of the installer to ensure that a suitable cable gland (giving adequate protection and strain relief) is fitted, and in doing so also ensure that no internal components are damaged during this installation. Make certain all swarf is removed before use.

It is the customer's responsibility to supply earth fault protection through the building installation device and a dedicated, isolated power supply with overload protection, to account for motor start up currents.

Warning

Do not connect any unit to an electrical supply voltage outside of the specification.

The following wiring diagrams are a guide to installing the standard fans found on **Ecovent® EVHE** units. If in any doubt, for units with fitted VES controls or for special versions of the units, consult the wiring diagram in your document pack or contact VES Customer Services on **023 8046 1150**, quoting the sales order (SO) number and unit type as found on the unit name plate.
For incorrect fan rotation, check with the VES Customer Services for advice, on **023 8046 1150**.

Standard Fan Details
Fig. 7

Size	Phase	Motor Size	Voltage	Fan Speed (rpm)	Full Load Current	Speed Control	Fans per unit
EVHE175-1	1 Phase	0.170 kW	230 VAC	2500	1.65A	EC	2

Standard Controls (Slave) arrangement
Fig. 8

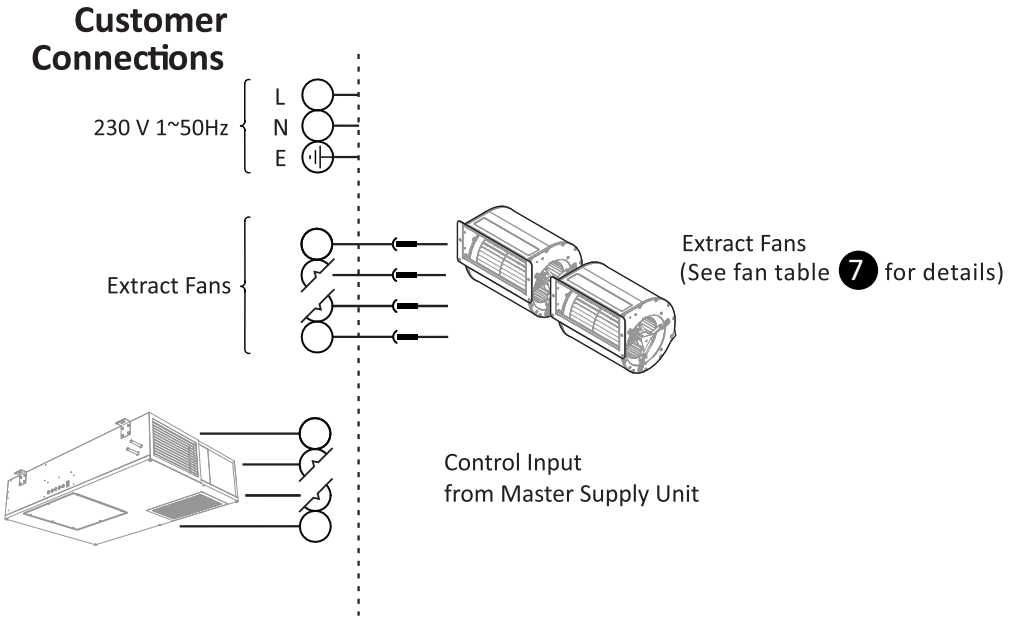

Maintenance 6

Important

Before attempting to carry out any work on VES units, all accompanying documentation including warning labels on the unit must be referenced.
Should it be necessary to remove any component, ensure they are secured into position once reinstalled. It is critical that after any maintenance work has been conducted that all components removed/replaced be refitted correctly by a competent engineer.

Warning

Before attempting to carry out any maintenance work, investigative or repair work on our units, the unit **MUST BE COMPLETELY ISOLATED** from its electrical supply. Ensure a minimum of two minutes after electrical disconnection before removing access panels. This will allow any moving parts to come to a complete standstill.
Care should also be taken when accessing external units as the wind and elements may cause moving parts to 'windmill'.

In general, this series of units require little maintenance. In the unlikely event of component failure, spares are available from stock at VES Andover Ltd.

Caution

When accessing the unit ensure the access panels are handled/opened in a controlled manner so as to avoid damage to the unit or injury to personnel. This is particularly important with bottom access units. Ensure the AHU has come to a complete stop before attempting any work on the unit

Important

Ecovent® EVHE units feature plug & socket connections to allow easy removal/replacement of key components. Separate the plug connection by hand (tools not required) by pressing the top/bottom clasp mechanism to open 9 and pulling the plug/socket apart .
DO NOT pull the cables to separate the assembly 10 .

Plug & socket operation
Fig. 9 10

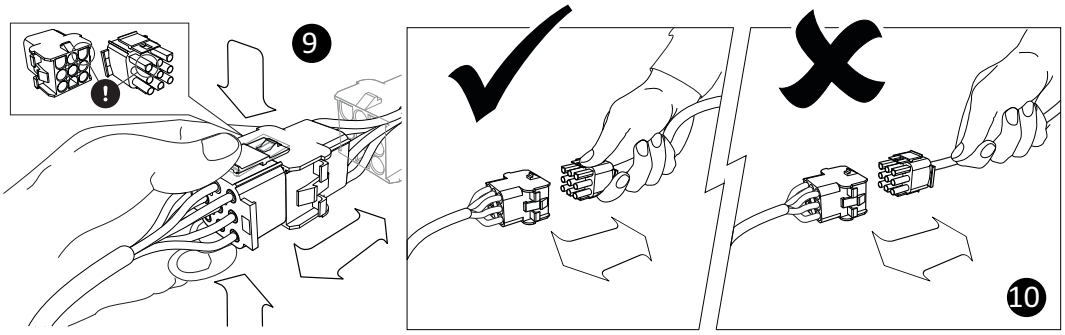

On reconnection, the assembly features a locating lug to ensure correct orientation. Once rejoined, lock the connection together again using the corresponding system as shown.
Note the plugs are handed and forcing an incorrect connection may result in damage to the plug.

Caution

To separate the assembly, hold the plugs to pull them apart. **DO NOT** pull the cables.

Maintenance 6 *Continued*

Important

Ecovent® EVHE units feature bulkhead-mounted fan plate assemblies.
Ensure that special care is taken when removing/replacing components/assemblies from bottom-access units. Larger access panels may require the use of two or more persons.
THE CONTROL ACCESS COVER MUST BE REMOVED *BEFORE* THE UNIT ACCESS COVER to gain safe access to the unit. Ensure all panels are safely replaced after access.

EVH1
Key components
Fig.11

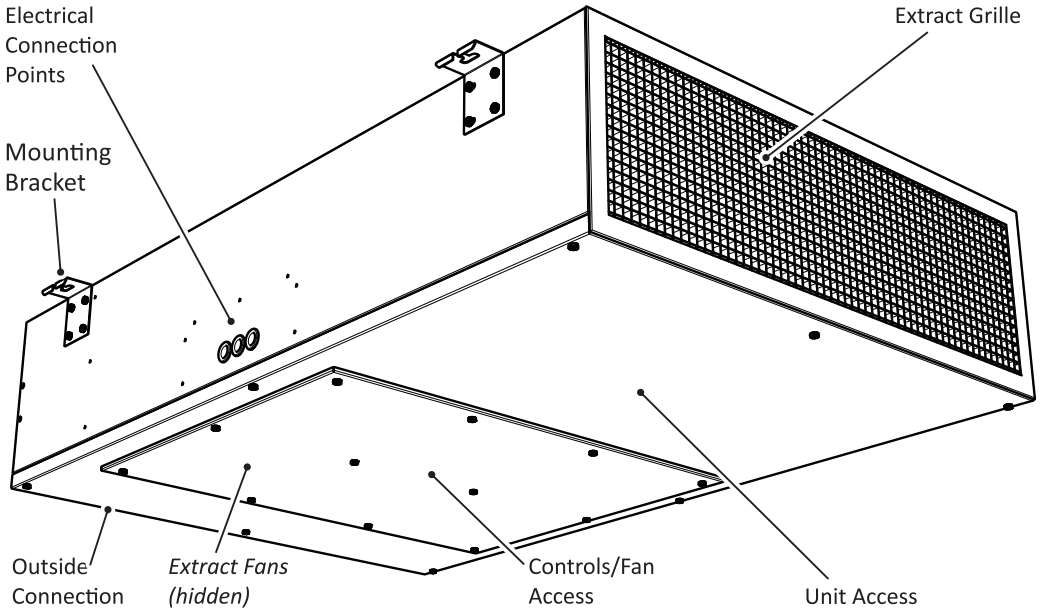

Ecovent® EVHE units feature double inlet centrifugal fans mounted on an adapter plate.
The extract fans are clearly visible beneath the main access panel.
To remove/replace, unplug as per Fig.9 10, undo the fixing screws and carefully remove the fan/adapter plate assembly, retaining all fixings.

Important

The fan mounting plates are slotted to aid plate alignment. It is important to keep the fan assembly supported at all times; the fan assembly should not be considered supported until all fixings are securely tightened.
The air-off side of the fan features a backdraught shutter. Take care when moving the fan not to damage the flap assembly 13

Extract Fan assembly removal/installation
Fig.12 13

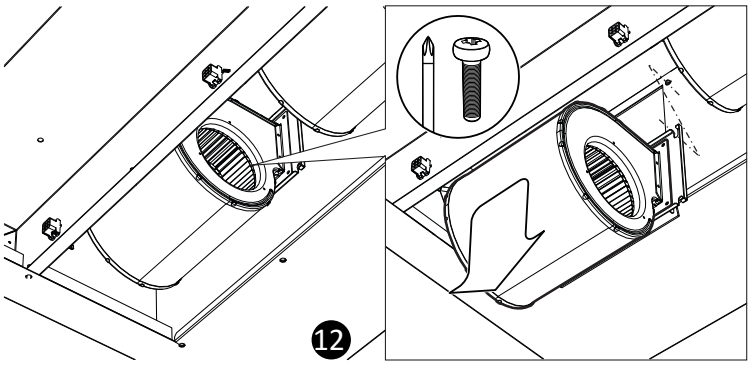

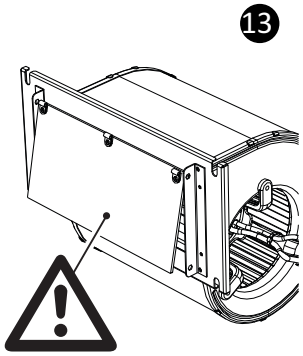

To replace the fan assembly, secure one fixing leaving enough of a gap to allow the adapter plate to slide into place. Fit the remaining fixing and tighten both. Ensure the impeller is free running. Reconnect the supply plugs as in Fig.9 10; if more than one plug is used, ensure the correct plugs are reconnected as marked.

Maintenance 6 Continued

Recommended Checks

In order to keep the unit in good order the following maintenance routine is recommended:

Six Monthly Checks

The fan impeller should be cleaned every 6 months. Failure to clean the fan on a regular basis could result in loss of fan performance, or cause it to fall out of balance. If a fan is stationary for long periods in a humid atmosphere, it should be switched ON for minimum of two hours every month to remove any moisture that may have condensed within the motor.
The fan motors are maintenance free due to the use of ball bearings with 'life-long lubrication'.
At the end of the grease life it may be necessary to change the fan unit.

Spares & Repairs

When enquiring after or ordering spares contact VES Spares Department, quoting the sales order (SO) number and unit type as found on the unit nameplate.

Tel: 023 8046 1150

WEEE Directive

At the end of their useful life the packaging and product should be disposed of via a suitable recycling centre. Do not dispose of with normal household waste. Do not burn.

ecovent®

Hybrid Extract Unit

Operation & Maintenance Manual

Eagle Close, Chandlers Ford Industrial Estate, Chandlers Ford, Eastleigh, Hampshire, SO53 4NF
Tel: +44 (0) 2380 46 11 50 email: info@ves.co.uk web: www.ves.co.uk

UK Declaration of Conformity

This declaration is issued under the sole responsibility of the product manufacturer.

Product:	Ecovent EVH Hybrid Ventilation Extract Units
Type:	EVHE
Manufacturer:	VES Andover Ltd.
Date:	5th December 2022

The object of the declaration described above is in conformity with the relevant UK Statutory Instruments and their amendments:

2016 No. 1091	The Electromagnetic Compatibility Regulations
2008 No. 1597	The Supply of Machinery (Safety) Regulations 2008
2010 No. 2617	The ECODESIGN for Energy-Related Products Regulations 2010

We hereby declare that the product described above, to which this declaration of conformity refers to, is in conformity with the essential requirements of the following standards:

BS EN ISO 12100:2010	Safety of machinery - General principles for design - Risk assessment and risk reduction
BS EN ISO 13857:2019	Safety of machinery. Safety distances to prevent hazard zones being reached by upper and lower limbs
BS EN IEC 61000-6-4:2019	Electromagnetic compatibility (EMC) - Generic standards
BS EN 61000-3-3:2013+A2:2021	Electromagnetic compatibility (EMC)-Limits
BS EN 61000-6-2:2005	Electromagnetic compatibility (EMC). Generic standards - Immunity for industrial environments
BS EN 60204-1:2018	Safety of machinery — Electrical equipment of machines

Name:	**Signature**	**Position of Signatory:**
A. Reade		Director
J. Atack		Head of Design

Eagle Close, Chandlers Ford Industrial Estate, Chandlers Ford, Eastleigh, Hampshire, SO53 4NF
Tel: +44 (0) 2380 46 11 50 email: info@ves.co.uk web: www.ves.co.uk