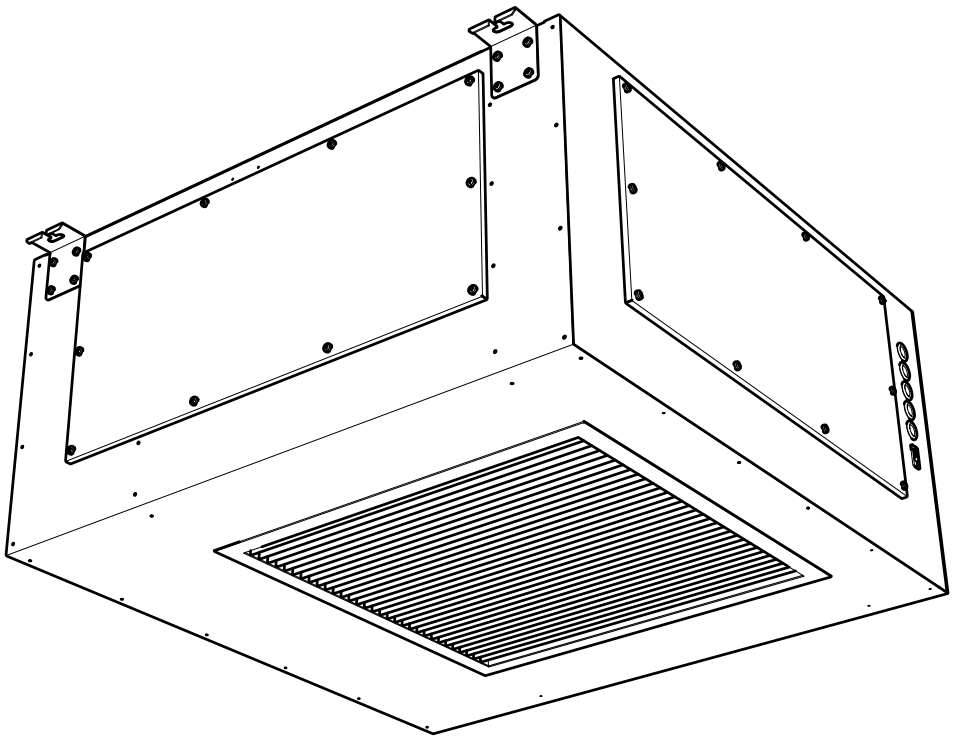

ecovent®

Hybrid Roof Ventilation Units

Operation & Maintenance Manual

VES

Eagle Close, Chandlers Ford Industrial Estate, Chandlers Ford, Eastleigh, Hampshire, SO53 4NF

Tel: +44 (0) 2380 46 11 50 email: info@ves.co.uk web: www.ves.co.uk

ID-Ref-VES-DSG-032
Issue 00
May 2024
Original Instructions

Conventions

Important **This manual must be read in full before Installation, Operation and Maintenance of the units supplied**

Please ensure that this document is passed to the end user. This manual forms an integral part of the product and should be kept for the working life of the product. Additional copies of this and supporting documents are available by contacting VES or by visiting **www.ves.co.uk** and following the 'Download O & M's' link.

The following symbols used within this document refer to potential dangers, advice for safe operation or important points of reference

Warning Indicates hazards associated with electric current and high voltages

Caution Indicates hazards that require safety advice for personnel or potential unit/property damage

Important Indicates important information

Contents

		page
1	Introduction	2
2	Nomenclature	3
3	Receipt of Goods & Handling	4
4	Installation	4
5	Standard Wiring & Fan Installation	12
6	Maintenance	18

Introduction 1

Ecovent® EVHR is a hybrid ventilation unit with an optimised duty of 0.50m³/s and a boost capacity of 0.70m³/s. Units are available as a master/slave pair.
The EVHR unit is suitable for ceiling/roof mounting with vertical airflow, internal locations only. A weatherproof roof terminal is also available.

As standard, each unit will have been supplied either pre-wired to a fitted control panel or pre-wired termals, as specified at the time of order. The standard operating temperature of these units is -20 to +35 °C.

For further technical details regarding dimensions and weights, contact VES on **023 8046 1150**, quoting the sales order (SO) number and the unit type as found on the unit nameplate, or alternatively visit **www.ves.co.uk**.

Nomenclature 2

Part Number Coding

	Point Description	Point Variants	Details (as appropriate)
1	Product	**EV**	Ecovent® Heat Recovery Units
2	Heat Recovery type	**HR**	Hybrid Roof Ventilation Units
3	Unit Size	**4**	Sequential see unit outline for details
4	Fan Type	**7**	Centrifugal EC fan
5	Fan Size	**3, 4**	Sequential
6	Phase	**-1**	230V 50Hz Single Phase
7	Main Heating	**Null**	No Heating
		/W	LPHW Coil
		/E	Electric Heater Battery
8	Main Filter	**Null**	No filter
9	Control Panel Section	**Null**	No Controls
		/MS01	Fitted control panel (master) V1
		/SV01	Fitted control panel (slave) V1
		/MS02	Fitted control panel (master) V2
		/SV02	Fitted control panel (slave) V2
10	Energy Monitoring	**Null**	No system
		/EM	Energy Monitoring
11	Gas Proving System	**Null**	No system
		/GF	Gas Proving System (Flamefast)
		/GM	Gas Proving System (Merlin)
12	Connection	**/GL**	Supply/Extract Grilles
		/SP/GL	Supply Spigot/Extract Grille
		/GL/SP	Supply Grille/Extract Spigot
		/SP/SP	Supply Spigot/Extract Spigot
13	Colour	**Null**	Galvanised finish
		/R9010	RAL Colour as specified
14	Finish	**MT**	Matt
		SG	Semigloss
		FG	Full Gloss
		LT	Leatherette
15	Powder Coat Type	**Null**	As colour
16	Variation	**/0001**	Sequential

Typical Example EVHR474-1/CPSC/MS/GL/R9010SG/0253

EV	HR	4	7	4	-1			/MS01			/GL	/R9010	SG		/0253
1	2	3	4	5	6	7	8	9	10	11	12	13	14	15	16

Receipt of Goods and Handling

3 Immediately upon receipt of goods, check for possible damage in transit paying particular attention to fan impellers, coil connections and unit casing. Prior to installation please check to ensure alignment and smooth rotation of the impeller after transit. Also check to ensure that any ancillary items are included. These will normally be supplied fitted or, in the case of small items, taped to the unit.

In the event of any damage having occurred or if any item is found to be missing, it is essential to inform VES Andover Ltd. within **7 days** of delivery quoting sales order number and the unit type, as found on the unit nameplate. After this period, VES is unable to accept any claim for damaged or missing goods.

Installation

4 The entire system must be considered for safety purposes. It is the responsibility of the installer to ensure that all of the equipment is installed in compliance with the manufacturer's recommendations, with due regard to the current HEALTH AND SAFETY AT WORK ACT and conforms to all relevant statutory regulations.

Where a unit is installed such that component failure could result in injury to personnel, precautions should be taken to prevent such an injury. If the unit is installed where there is a reasonable possibility of persons or objects coming into contact with the impeller whilst operational, a guard should be fitted or steps taken to prevent this. It is the installer's responsibility to ensure that access panels are not obstructed in any way. Safe working access for maintenance must be provided in accordance with Health and Safety and Building Regulations. For confirmation of required access please see the appropriate unit outline drawing.

For safe maintenance, consideration must also be given by the installer for adequate illumination of the unit location. Further consideration should be given to the unit's position and secured into place as appropriate.

Caution ⚠ Mounting hangers, door furniture etc. extend beyond the casework, so are vulnerable to damage. Take necessary precautions so as not to cause damage whilst handling the unit.

The weight of each unit/section is specified on the outline drawing and the total unit weight will be displayed on the unit inspection label. When lifting the unit using a fork lift truck ensure the whole unit is supported by the full length of the forks. It may be necessary to use fork extensions to fully support the unit. The centre of gravity may be offset from the centre of the unit; this needs to be taken into consideration when lifting the unit.

Fork Lifting Detail
Fig. 1

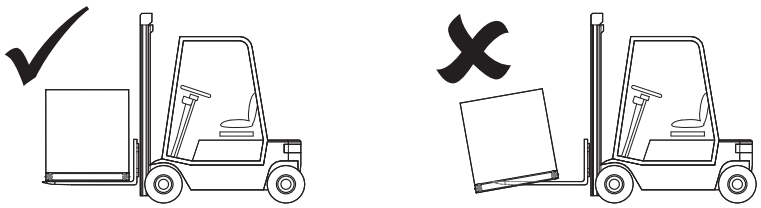

Caution ⚠ Handle with care. Failure to fully support the unit during lifting may result in damage to the unit casework

Lifting Detail
Fig. 2

Units are to be rigged and lifted using spreaders, taking into account the weight of the unit. Lifting gear should be arranged so as not to bear on the casework, see right.

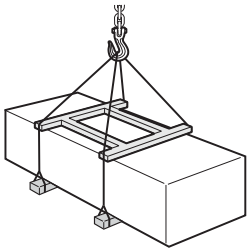

Installation 4 *Continued*

Ecovent® EVHR units are designed to be mounted flush against the underside of the ceiling slab, connected to a purpose-made terminal or turret. The connecting duct needs to be split so as to differentiate between the supply and extract airflows. Clearance is required on all faces of the fan section allowing access to both sides to the fans, the rear to the controls section and clearance to the grilles.

Typical installation detail

Fig. 3

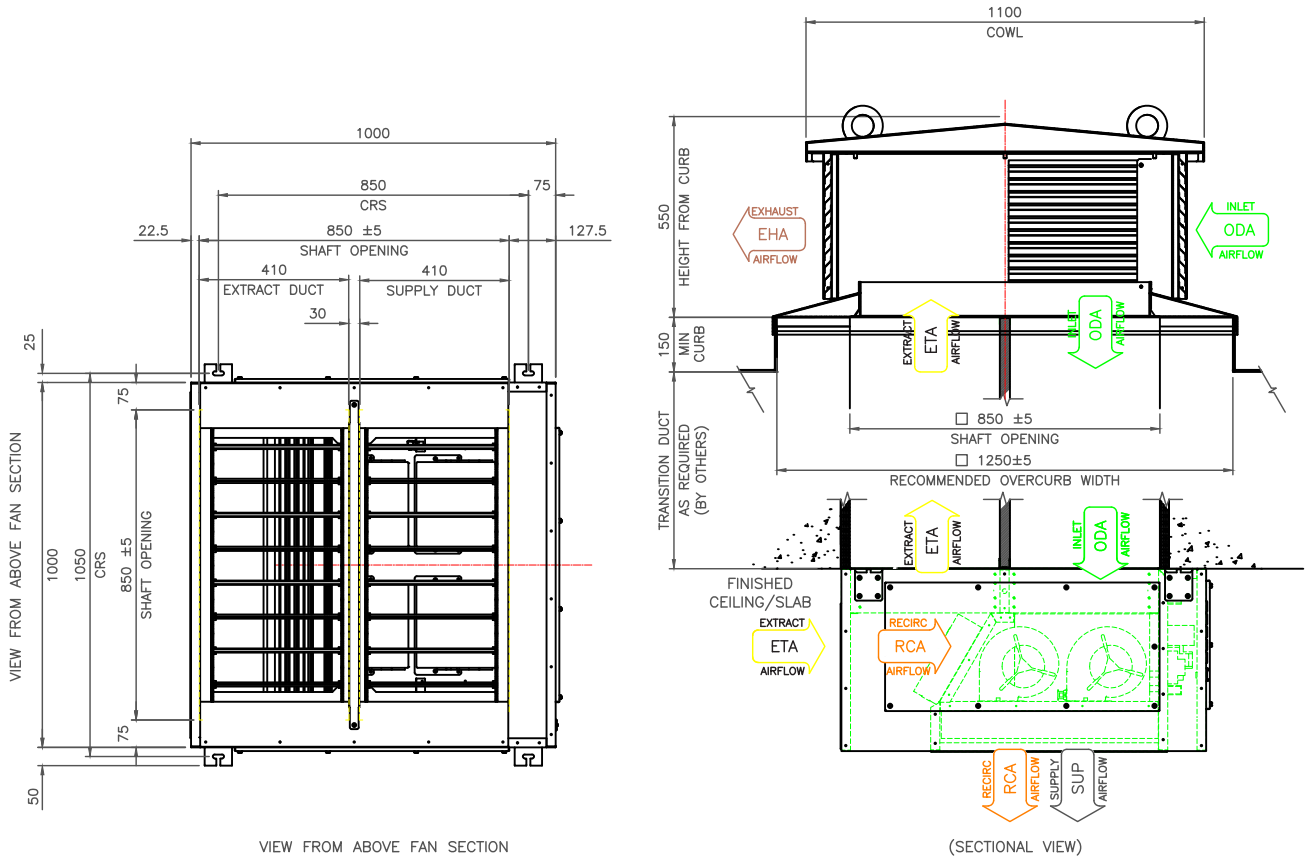

Installation 4 *Continued*

Key installation components (Roof Turret)

Fig. 4

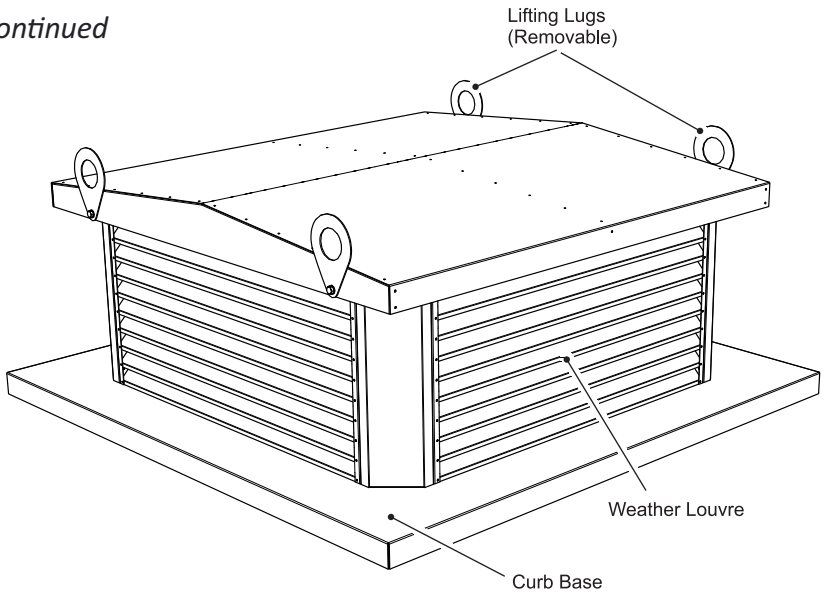

Key installation components (Fan Section)

Fig. 5

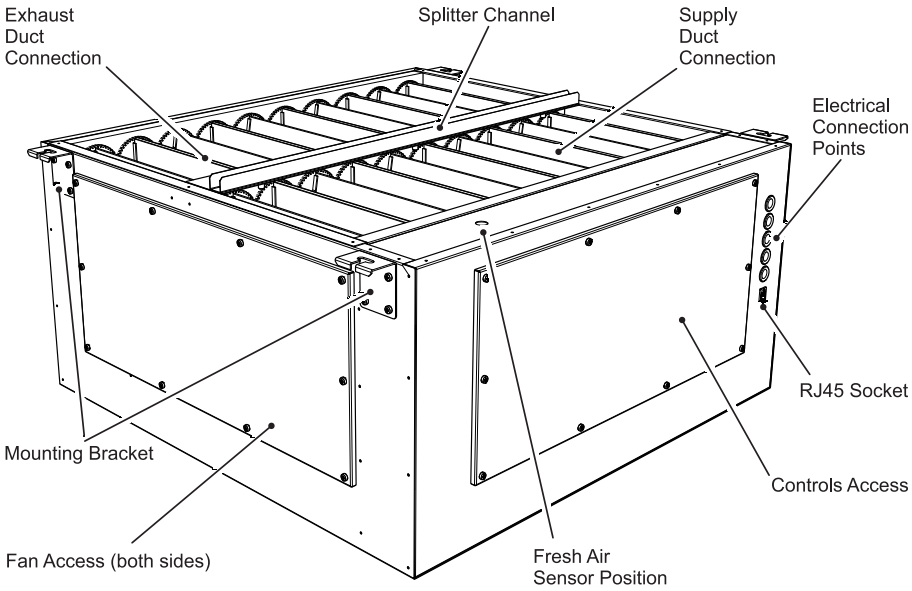

Key installation components (Heating Coil Section)

Fig. 6

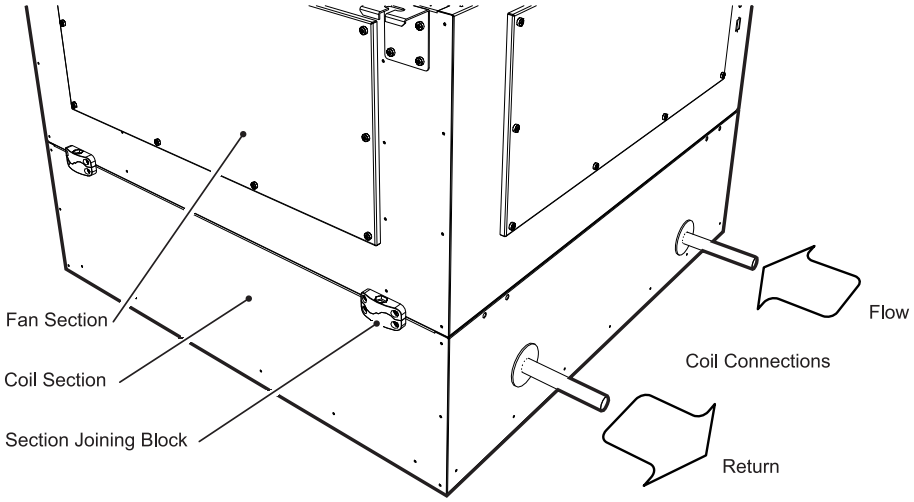

Installation 4 *Continued*

Ecovent® EVHR units fan sections are supplied with hangers suitable for drop-rod or ceiling-void mounting, with supply and discharge airflow in the vertical plane.
For alternative mounting please consult your outline drawing as supplied with the unit, or refer to VES Customer Services for further information.

Secure drop rods/unit with the appropriate fixings as shown below 7.

Unit mounting detail
Fig. 7

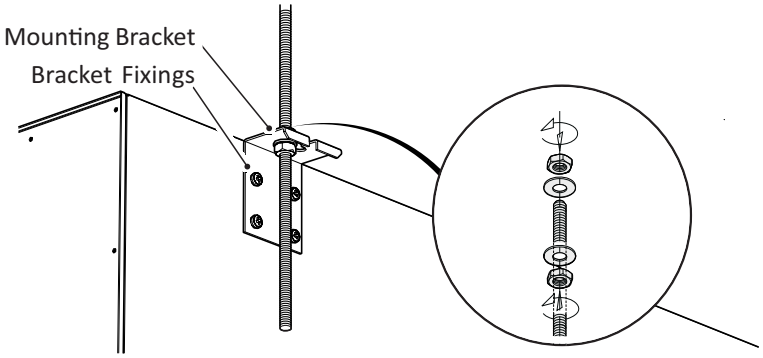

Important !

When hanging units from drop-rods, ensure that the load is evenly spread and that **ALL** brackets are used within the support. Ensure that the drop rod/fixing used is selected appropriately to accommodate the load of the unit.

Ecovent® EVHR units feature fresh air (supply) and exhaust ducts and as previously stated, are intended to be mounted flush. In order to ensure that the two opposing airflows are separated, a site-specific splitter (by others) MUST be incorporated into the installation. A 30mm wide removable channel has been included on the top of the fan section and bottom of the turret to assist with alignment.
The fresh air sensor is supplied loose inside the controls section to avoid damage during transit. Install inside the fresh air duct using the gland position provided.

Refer to the unit outline for confirmation of the handing and ductwork arrangement as required.

Caution ⚠

Separator channels are **NOT** structural and are included as part of the unit sealing only. When moving assembled units ensure that **ALL** sections are fully supported.

Important !

In order to allow sufficient separation between the supply and exhaust airflows the turret is handed , with the supply section open on three faces and the exhaust open on only one face.

Ensure that the correct turret section aligns with the corresponding part of the fan section

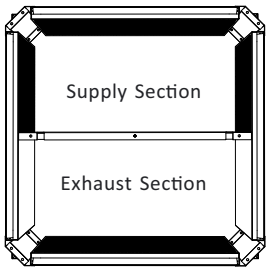

(Looking up)

8

Installation 4 *Continued*

Turret with curb base mounting

The roof turret terminal is designed to sit on top of a prepared roof upstand, for further dimensional details refer to the unit outline drawing. We recommend that each turret be fixed to the upstand with coach screws or similar , through the side of the curb base into the timber upstand see 9 This is especially important as strong winds could be encountered in exposed locations.

Curb mounting detail

Fig. 9

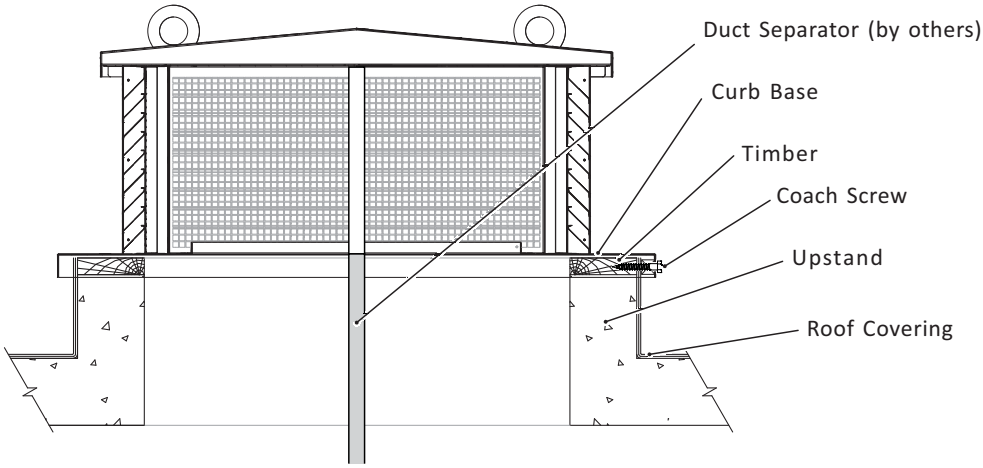

Before cutting into the roof ensure that the correct profile base has been purchased. All roof apertures must be independently supported by structural trimmers in accordance with local building regulations, in order to protect plant weight and support any service personnel.
The EVHR turret is designed to be mounted horizontally level only, not pitched.
This installation may require more than one engineer as access to both the roof and ventilated area will be required.

Soaker Sheet detail

Fig. 10

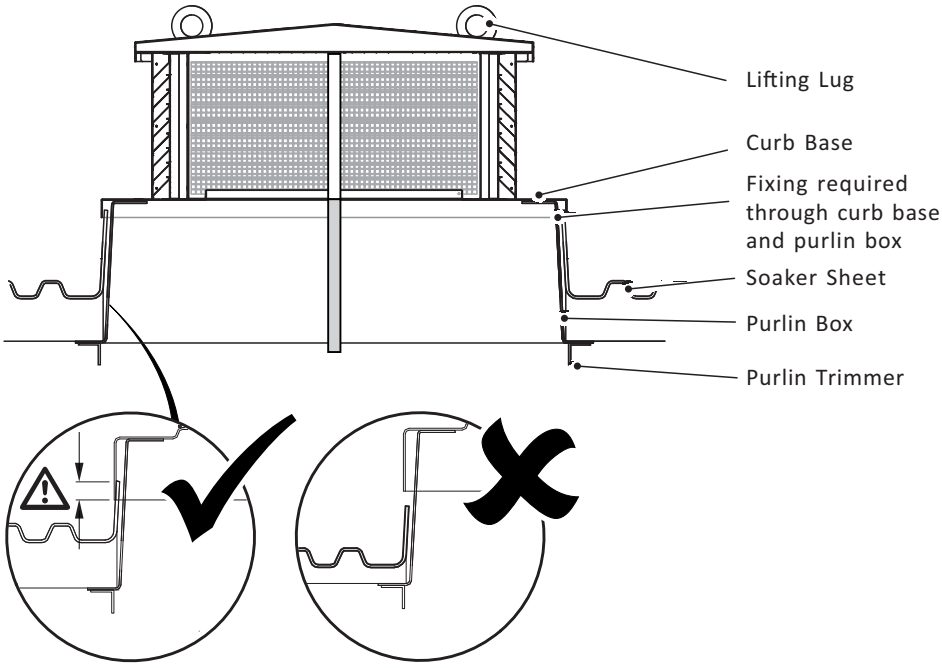

Caution ⚠ It is important that the height of the purlin box support be adjusted to ensure that the curb base overlaps the soaker sheet correctly (see above). This can be achieved by adjusting the position of the purlin trimmer. Failure to set this correctly will compromise the integrity of the the roof and may lead to leakage.

Installation 4

EVHR/W LPHW Coil Units

Continued

Ecovent® EVHR units are offered in a LPHW heating variant. The coil section is secured to the fan section using self-locating joining brackets. The coil section is square in profile and can be reconfigured to allow alternate coil connection positions relative to the fan section should that be required.

Coils should be piped according to any relevant local codes of practice. As standard EVHR coils are supplied with a 1" BSP connection. All external piping is to be supported independently from the coil. The flow connection is nearest the bottom of the unit.

Important It is important the connecting pipework route does not obscure any of the fan section access.

Caution It is important that coils are protected against damage from extreme weather conditions during the winter season. If the water is allowed to freeze in the coil system, damage may occur. potentially bursting pipes and resulting in emergency problems. **EVHR** LPHW units are fitted with a coil temperature sensor as standard and ensuring that boilers run continuously in low ambient temperatures can help prevent possible damage.

On **Ecovent® EVHR/ -W** units, a Low Pressure Hot Water (LPHW) coil will be installed. The coils are normally suitable for low pressure hot water with a range of between 80 ~ 40 °C flow and between 70 ~ 30 °C return temperature. The coil should be regularly vented so as to avoid potential air locks, resulting in a fall off of duty.

It is recommended that a check be made as to whether any treatment is required to the water supply for prevention of corrosion and scaling of the equipment. Information regarding the necessary action to be taken can be obtained from the relevant Local Water Supply Authority.

Important Repositioning the coil section is best done **BEFORE** installing the unit at roof/ceiling level.

Caution When repositioning the coil section the casework for both sections **MUST** be fully supported. A supply temperature sensor is positioned within the coil section and hardwired to the control panel, separating the sections too far apart may result in damage to critical components. A service loop has been provided to aid rework. Ensure the sensor cable is stowed within the coil section when reassembling the sections so as not to trap the cable between the joints.

Installation

Coil Section Reorientation

4 *Continued*

With the unit fully supported, remove the 4 joining block fixings using a 6mm hex key as shown in fig. 11.

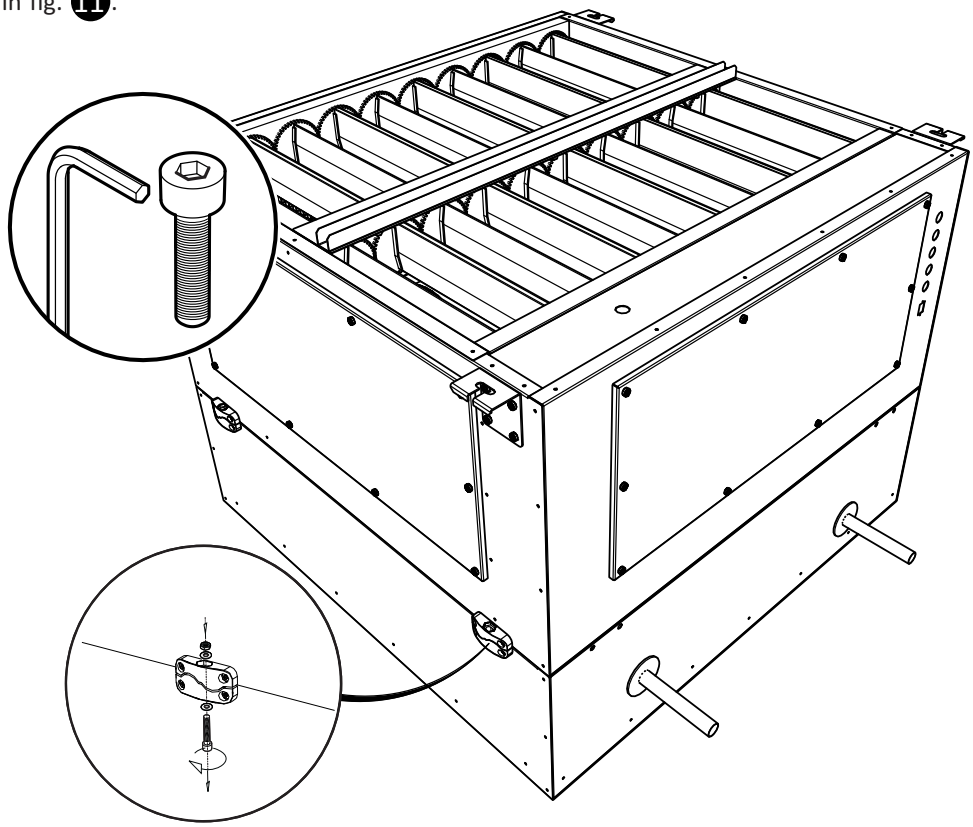

Coil Section reconfiguration

Fig.11

Taking care with the supply sensor cable, separate the sections. If rotating the coil section +/- 90° reposition the coil section joing bracket to the next face as shown in fig. 12. This bracket repositioning is not required for a 180° rotation.

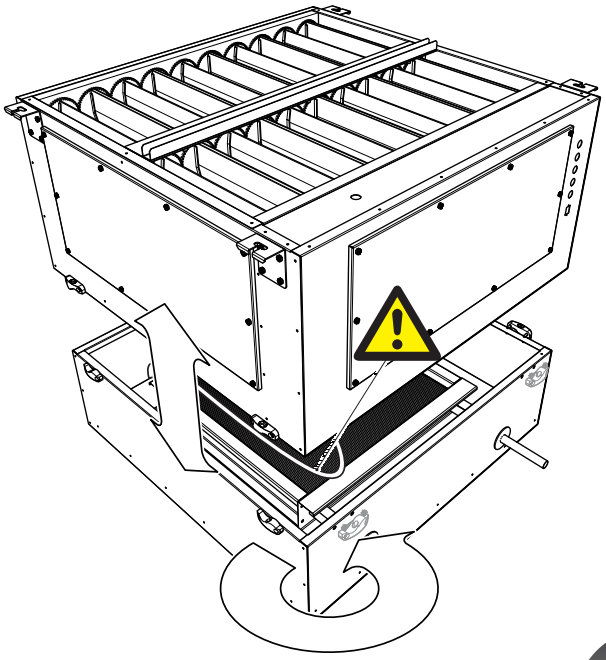

Repositioning Mounting Brackets

Fig.12

Installation

Coil section Reassembly

4 *Continued*

Rotate the sec ons to match the required configuration as shown in fig. 13, again take care with the sensor cable. If at floor level, this is easiest to achieve by lifting and rotating the fan section.

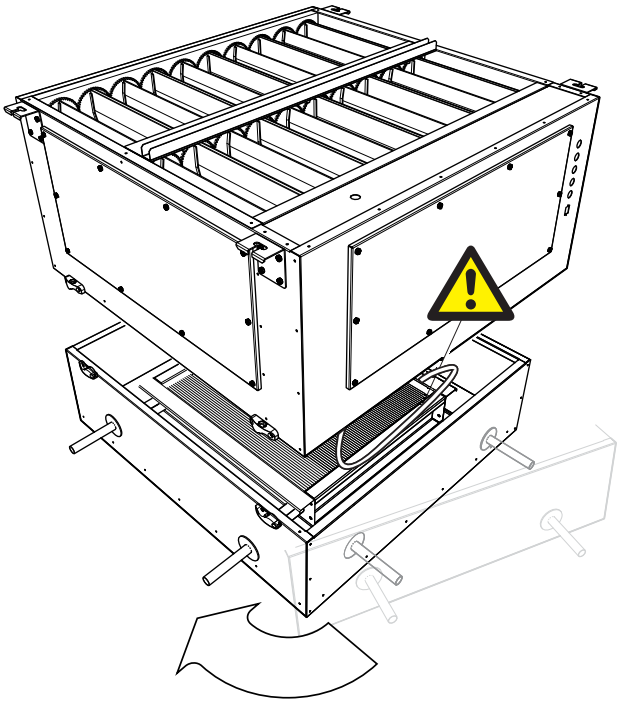

Ensuring all joining brackets are securely fastened to the casework, reassemble the two sections by retightening the four joining brackets and drawing the sections together as shown in fig. 14, Again take care with the sensor cable.

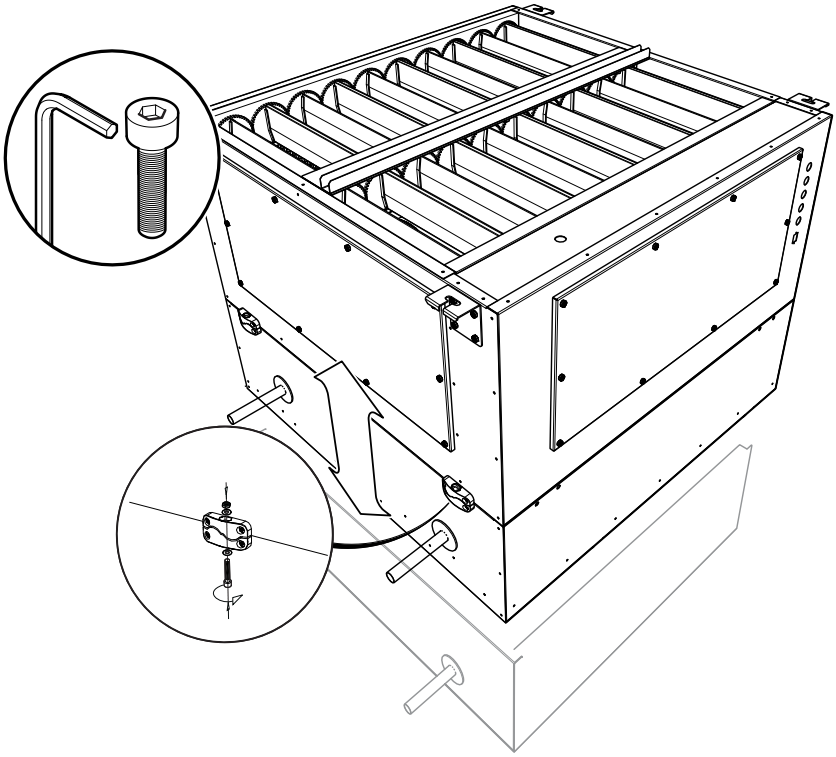

Rejoining the sections

Fig.14

Standard Wiring and Fan Installation 5

Warning

The electrical supply **must be fully isolated** before attempting to affect any work on this unit. All electrical connections to any unit must be carried out in accordance with the current edition of the I.E.T Regulations, only competent Electricians should be allowed to affect any electrical work to our units.

Important

A cable entry point is provided at the control section.
It is the responsibility of the installer to ensure that a suitable cable gland (giving adequate protection and strain relief) is fitted, and in doing so also ensure that no internal components are damaged during this installation. Make certain all swarf is removed before use.

It is the customer's responsibility to supply earth fault protection through the building installation device and a dedicated, isolated power supply with overload protection, to account for motor start up currents.

Warning

Do not connect any unit to an electrical supply voltage outside of the specification.

The following wiring diagrams are a guide to installing the standard fan and actuator options found on **Ecovent® EVHR** units. If in any doubt, for units with fitted VES controls or for special versions of the units, consult the wiring diagram in your document pack or contact VES Customer Services on **023 8046 1150** , quoting the sales order (SO) number and unit type as found on the unit name plate.
For incorrect fan rotation, check with the VES Customer Services for advice, on **023 8046 1150**.

Standard Fan Details
Fig.15

Size	Phase	Motor Size	Voltage	Fan Speed (rpm)	Full Load Current	Speed Control	Fans per unit
EVHR474-1	1 Phase	0.100 kW	230 VAC	1410	0.83 A	EC	4

Units fitted with master controls feature an RJ45 socket at the cable entry point to enable connection of the controls interface (HMI). This allows setup and commissioning of the unit to be carried out via a handheld HMI, which can be left connected and mounted in a more appropriate position or removed as required.

RJ45 Socket/HMI connection point
Fig.16

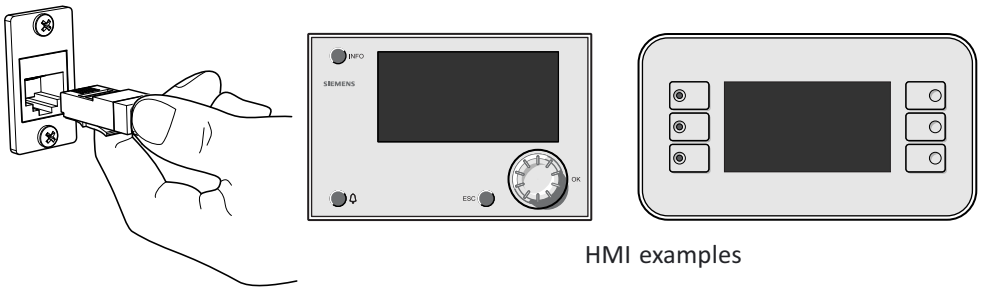

HMI examples

Standard Wiring & Fan Installation

5 *Continued*

Standard Controls (Master) arrangement Fig. 17

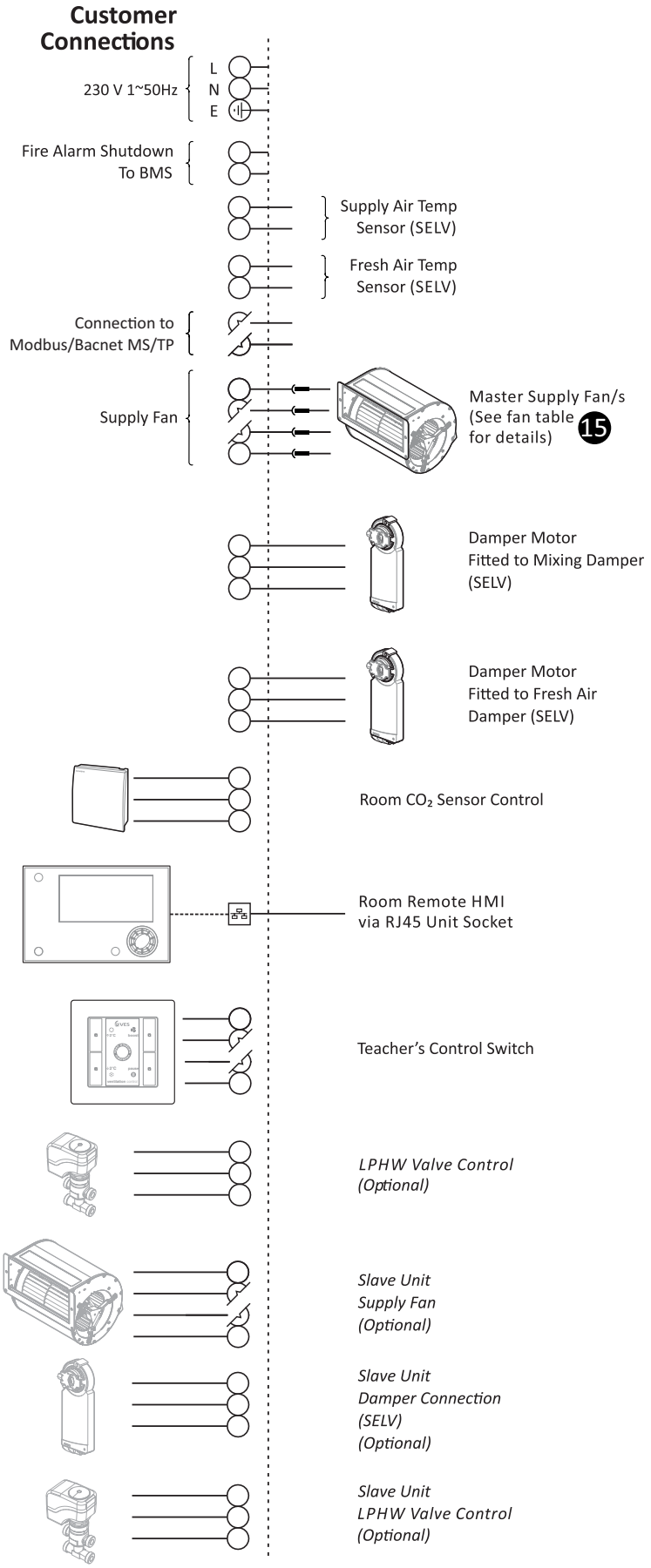

Standard Wiring & Fan Installation

5 *Continued*

Standard Isolator (Slave) arrangement Fig. 18

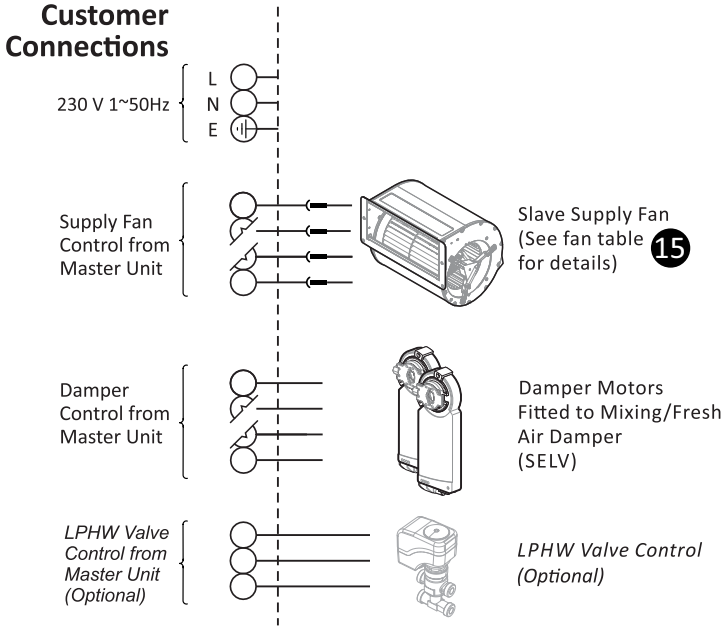

Standard Wiring & Fan Installation 5 *Continued*

Important The following gives an overview of the current and previous versions of Room override panel. For details regarding its full opera on and the full controls philosophy, please contact VES Controls Department on **023 8046 1150 for further information**

Controls arrangement 2022

For each room an information and override panel is provided to allow the user to override the automatic controls.

The panel comprises:
- Fresh Air Boost switch
- Pause switch
- Temperature Adjustment switches *+/- 2 °C*
- Open windows indication

Override Panel Fig. 19

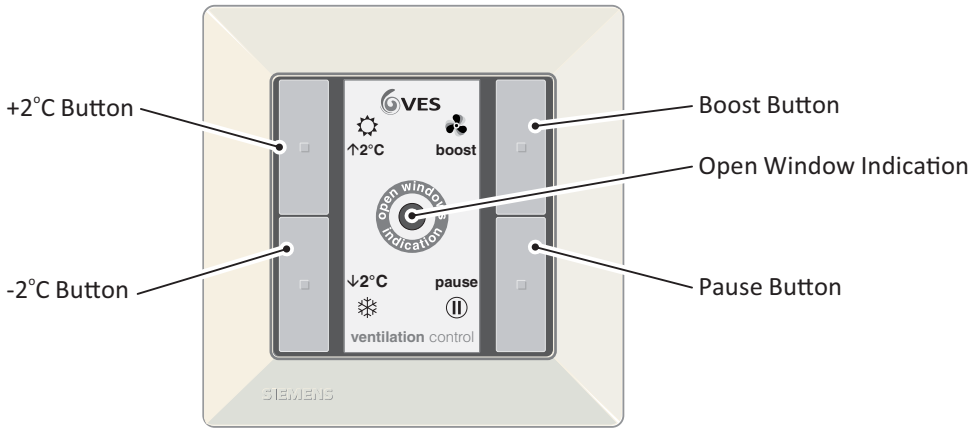

EPEL3001
Override Panel

Temperature Adjustment Switches

When the ↑2°C button is momentarily pressed the set point will be increased by 2°C. Pressing the ↓2°C button will cancel this action.
Likewise, when the ↓2°C button is momentarily pressed the set point will be decreased by 2°C
If the unit is in heating mode, when the ↑2°C button is pressed for 3 seconds the unit will go into Heating Boost.

Fresh Air Boost Switch

Operation of the boost switch will start the system (if off) in fresh air boost mode and the boost LED will illuminate. The fans will run at “Boost Switch Supply Speed”. The mixing box position will be limited to force fresh air intake as shown in Section 7. The system will revert to automatic operation after a pre-set period “Boost Switch Duration” or if the switch is pressed again. A short time delay will prevent rapid mode switching by unauthorised operatives.
Operation of the Boost switch will run the unit to maximum set speed and modulate the dampers to allow maximum amount of fresh air possible without affecting room temperature. If the unit is off, operation of the Boost switch will start the system in boost mode. The system will revert to automatic operation after a preset period or if the switch is operated again. A time delay will prevent rapid mode switching by unauthorised operatives.

Standard Wiring & Fan Installation 5 *Continued*

Pause Switch

Operation of the Pause switch will pause the system. The system will revert to automatic operation after a preset period or if the switch is operated again. A time delay will prevent rapid mode switching by unauthorised operatives.

Open Windows Indication

The open windows indication shall illuminate when the external temperature reaches a suitable level to encourage manual window opening. The centre LED will illuminate if the external temperature exceeds “Window Open Minimum External Temperature” (default maximum 5°C between the room setpoint and external air temperature).
Alternatively, the LED will illuminate if the room CO_2 level exceeds the CO_2 Setpoint” to encourage manual opening of the windows to assist the unit in achieving target conditions.

Diagnostic Mode

Diagnostic mode is used to give a simple indication of any alarms that may be present in the system. Further examination can be made via connections with the BMS or through a handheld HMI.

If the **Boost and Pause switches are pressed together** and held down for three seconds the teachers panel will temporarily enter a diagnostic mode. All the LEDs on the teacher panel will flash up together to show that the panel has entered diagnostic mode. 10 seconds later all the LEDs on the teacher panel will again flash up together to show that the panel has exited diagnostic mode. In diagnostic mode specific alarms are indicated by the following LED sequences:

Diagnostic Mode Fig. 20

LED	Solid On / Flashing	Alarm
↑2°C	On	1x Supply Fan Trip
↑2°C	Flashing	More than 1x Supply Fan Trip
↓2°C	On	Peristaltic Pump Trip
Boost	On	Slave / Extract Fan Trip
Open Windows	On	Frost Hazard
Open Windows	Flashing	No Hot Water Alarm

Important When in diagnostic mode if the Boost switch is pressed, all present alarms will be acknowledged.

Standard Wiring & Fan Installation

Controls arrangement
Pre 2022

5 *Continued*

For each room an information and override panel is provided to allow the user to override the automatic controls.

The panel comprises:

- Boost/Pause switch (retractive)
- Boost/System Healthy active indication (orange)
- *+/- 2 °C Temperature trim switch (retractive) [EPEL2014 only]*
- Versions with '*open window*' indication also available

Operation of the Boost switch will run the unit to maximum set speed and modulate the dampers to allow maximum amount of fresh air possible without affecting room temperature. If the unit is off, operation of the Boost switch will start the system in boost mode. The system will revert to automatic operation after a preset period or if the switch is operated again. A time delay will prevent rapid mode switching by unauthorised operatives. The Boost/System Healthy indication will illuminate with an asymmetric pulse.

Operation of the Pause switch will pause the system. The system will revert to automatic operation after a preset period or if the switch is operated again. A time delay will prevent rapid mode switching by unauthorised operatives. The Boost/System Healthy indication will stop illuminating until the unit resumes normal operation.

Operation of the +/-2°C Temperature trim switch will allow the user override of the room design temperature by +2°C or -2°C. This is limited to 2°C either side of the setpoint, the system will revert to automatic operation after a preset period.
In addition, pressing and holding the +2°C button for more than 3 seconds will initiate the heating boost mode. This will cause the fan to run at boost speed, call for full heating and put the unit into full recirculation. Pressing and holding the -2°C button will cancel this action or after a preset period the system will revert to automatic operation. The plate indicators will flash once as confirmation for either action.

For details regarding older switchplate designs or special versions please contact VES Customer Services on **023 8046 1150 for further information**

Override Panels
Fig. 21

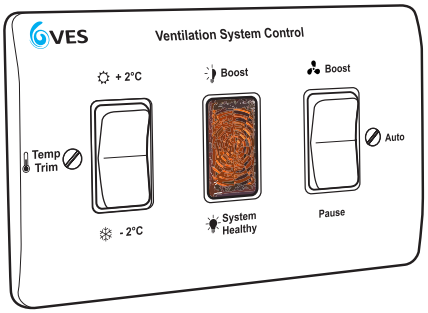

EPEL2014
Override Panel c/w temperature trim

EPEL2010
Override Panel (no trim)

Important !

The system healthy indicator will illuminate when the unit is operational. In the event of a system failure, the indicator will be off and the buttons will be unresponsive e.g pressing the boost button results in no boost indication. Should this situation arise the system should be checked for a possible fault.

Maintenance 6

Important

Before attempting to carry out any work on VES units, all accompanying documentation including warning labels on the unit must be referenced.
Should it be necessary to remove any component, ensure they are secured into position once reinstalled. It is critical that after any maintenance work has been conducted that all components removed/replaced be refitted correctly by a competent engineer.

Warning

Before attempting to carry out any maintenance work, investigative or repair work on our units, the unit **MUST BE COMPLETELY ISOLATED** from its electrical supply. Ensure a minimum of two minutes after electrical disconnection before removing access panels. This will allow any moving parts to come to a complete standstill.
Care should also be taken when accessing external units as the wind and elements may cause moving parts to 'windmill'.

In general, this series of units require little maintenance. In the unlikely event of component failure, spares are available from stock at VES Andover Ltd.

Caution

When accessing the unit ensure the access panels are handled/opened in a controlled manner so as to avoid damage to the unit or injury to personnel. This is particularly important with bottom access units. Ensure the AHU has come to a complete stop before attempting any work on the unit

Important

Ecovent® EVHR units feature plug & socket connections to allow easy removal/replacement of key components. Separate the plug connection by hand (tools not required) by pressing the top/bottom clasp mechanism to open 22 and pulling the plug/socket apart .
DO NOT pull the cables to separate the assembly 23 .

Plug & socket operation
Fig.22 23

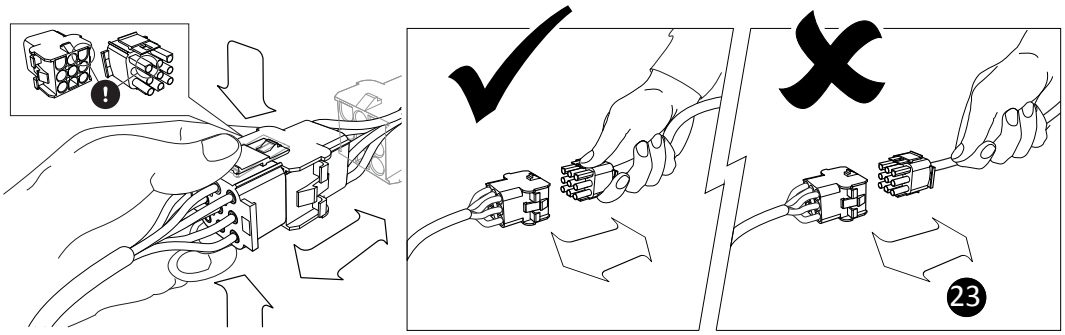

On reconnection, the assembly features a locating lug to ensure correct orientation. Once rejoined, lock the connection together again using the corresponding system as shown.
Note the plugs are handed and forcing an incorrect connection may result in damage to the plug.

Caution

To separate the assembly, hold the plugs to pull them apart. **DO NOT** pull the cables.

Maintenance 6 *Continued*

EVH1
Key components
Fig.24

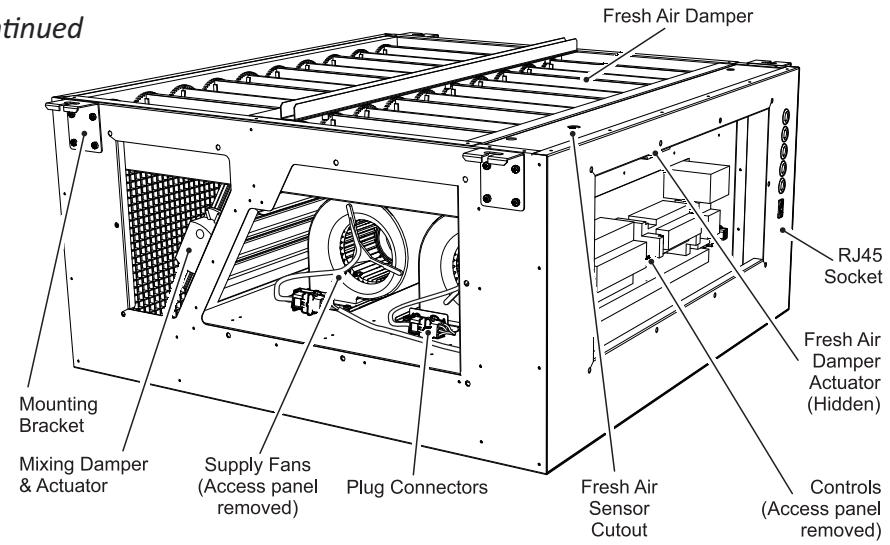

Ecovent® EVHR roof units feature 4 double inlet centrifugal fans mounted on fan plates in pairs. Each fan plate is secured into place using 4No. M6 fixings.
To remove the fans, ensure the unit is fully isolated and that any moving components have come to a halt. Remove both side access panels. 1 Separate the connecting fan plug and socket at both sides, using the procedure as detailed on page 15. 2 Remove and keep the 4 M6 fixings, 2 each side and 3 carefully slide the fan plate assembly out through either side access, taking care not to snag any adjacent components. Ensure when replacing any components that all fixings are reinstated, that the plug and socket are correctly assembled and that loose cables are safely stowed away from all moving parts.

Supply Fan assembly removal/installation
Fig.25

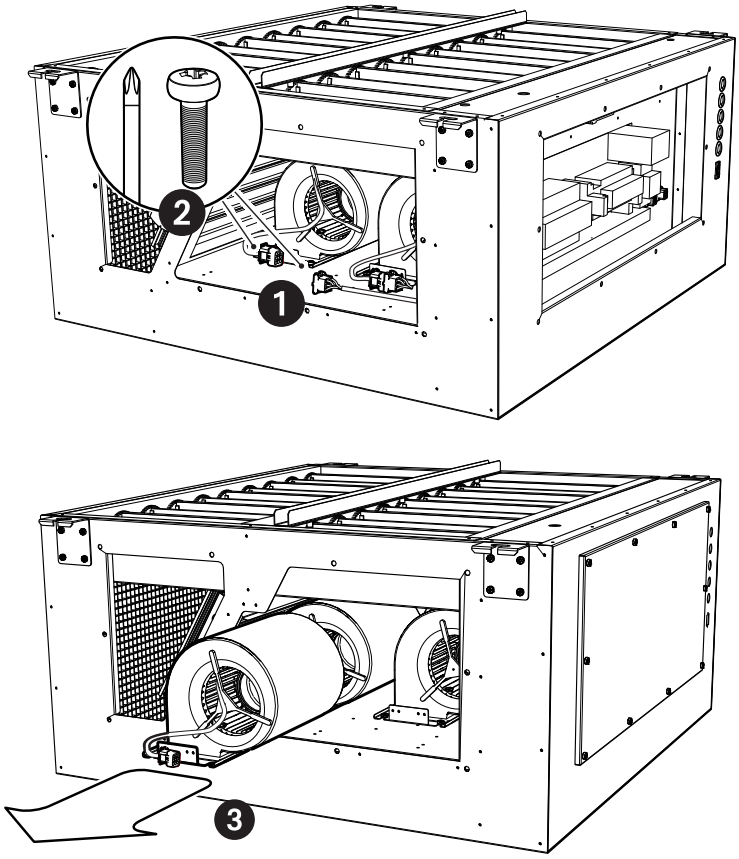

Maintenance 6 Continued

Supply Fan assembly removal/installation

For units prior to March 2019, the fans are mounted directly onto the fan bulkhead.
To remove the fans, ensure the unit is fully isolated and that any moving components have come to a halt. Remove the side access panels. Separate the connecting fan plug and socket, using the procedure as detailed on page 10. Carefully remove the double deflection grille from the bottom of the unit retaining the fixings, and remove the fixings holding the appropriate fan. Remove the fan through the side access and replace as required. Again ensure all fixings are reinstated, that the plug and socket are correctly assembled and that loose cables are safely stowed away from all moving parts.

Supply Fan assembly removal/installation

Fig. 26

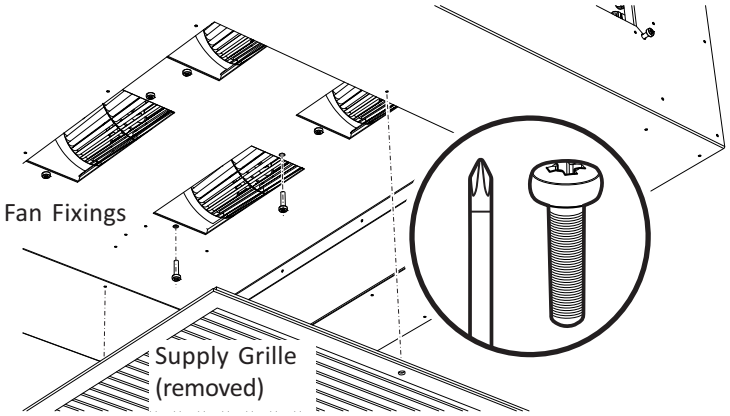

Recommended Checks

In order to keep the unit in good order the following maintenance routine is recommended:

Six Monthly Checks

The fan impeller should be cleaned every 6 months. Failure to clean the fan on a regular basis could result in loss of fan performance, or cause it to fall out of balance. If a fan is stationary for long periods in a humid atmosphere, it should be switched ON for minimum of two hours every month to remove any moisture that may have condensed within the motor.
The fan motors are maintenance free due to the use of ball bearings with 'life-long lubrication'.
At the end of the grease life it may be necessary to change the fan unit.
Failure to keep dampers clean could result in the damper becoming inoperative. Clean damper blades and frames and lubricate with PTFE aerosol or equivalent.

For units with integrated heating, the heating coil should be inspected for debris, dust or dirt build up. If found contaminated, foreign matter should be removed accordingly; superficial dust or debris can be removed from the surface of the heat exchange by gently brushing. Loosened debris can then be vacuumed from the surface of the coil.

Spares & Repairs

When enquiring after or ordering spares contact VES Spares Department, quoting the sales order (SO) number and unit type as found on the unit nameplate.

Tel: 023 8046 1150

WEEE Directive

At the end of their useful life the packaging and product should be disposed of via a suitable recycling centre. Do not dispose of with normal household waste. Do not burn.

PLEASE ENSURE THAT THIS DOCUMENT IS PASSED ON TO THE END USER

ecovent®

Hybrid Roof Ventilation Units

Operation & Maintenance Manual

©VES Andover Ltd. 2022
VES is a trading name of VES Andover Ltd.
Registered in England No. 02303719.
Registered Office as above.

Eagle Close, Chandlers Ford Industrial Estate, Chandlers Ford, Eastleigh, Hampshire, SO53 4NF
Tel: +44 (0) 2380 46 11 50 email: info@ves.co.uk web: www.ves.co.uk

UK Declaration of Conformity

This declaration is issued under the sole responsibility of the product manufacturer.

Product:	Ecovent EVHR Hybrid Ventilation Units
Type:	EVHR
Manufacturer:	VES Andover Ltd.
Date:	5th December 2022

The object of the declaration described above is in conformity with the relevant UK Statutory Instruments and their amendments:

2016 No. 1091	The Electromagnetic Compatibility Regulations
2008 No. 1597	The Supply of Machinery (Safety) Regulations 2008
2010 No. 2617	The ECODESIGN for Energy-Related Products Regulations 2010

We hereby declare that the product described above, to which this declaration of conformity refers to, is in conformity with the essential requirements of the following standards:

BS EN ISO 12100:2010	Safety of machinery - General principles for design - Risk assessment and risk reduction
BS EN ISO 13857:2019	Safety of machinery. Safety distances to prevent hazard zones being reached by upper and lower limbs
BS EN IEC 61000-6-4:2019	Electromagnetic compatibility (EMC) - Generic standards
BS EN 61000-3-3:2013+A2:2021	Electromagnetic compatibility (EMC)-Limits
BS EN 61000-6-2:2005	Electromagnetic compatibility (EMC). Generic standards - Immunity for industrial environments
BS EN 60204-1:2018	Safety of machinery — Electrical equipment of machines

Name:	**Signature**	**Position of Signatory:**
A. Reade		Director
J. Atack		Head of Design

Eagle Close, Chandlers Ford Industrial Estate, Chandlers Ford, Eastleigh, Hampshire, SO53 4NF
Tel: +44 (0) 2380 46 11 50 email: info@ves.co.uk web: www.ves.co.uk