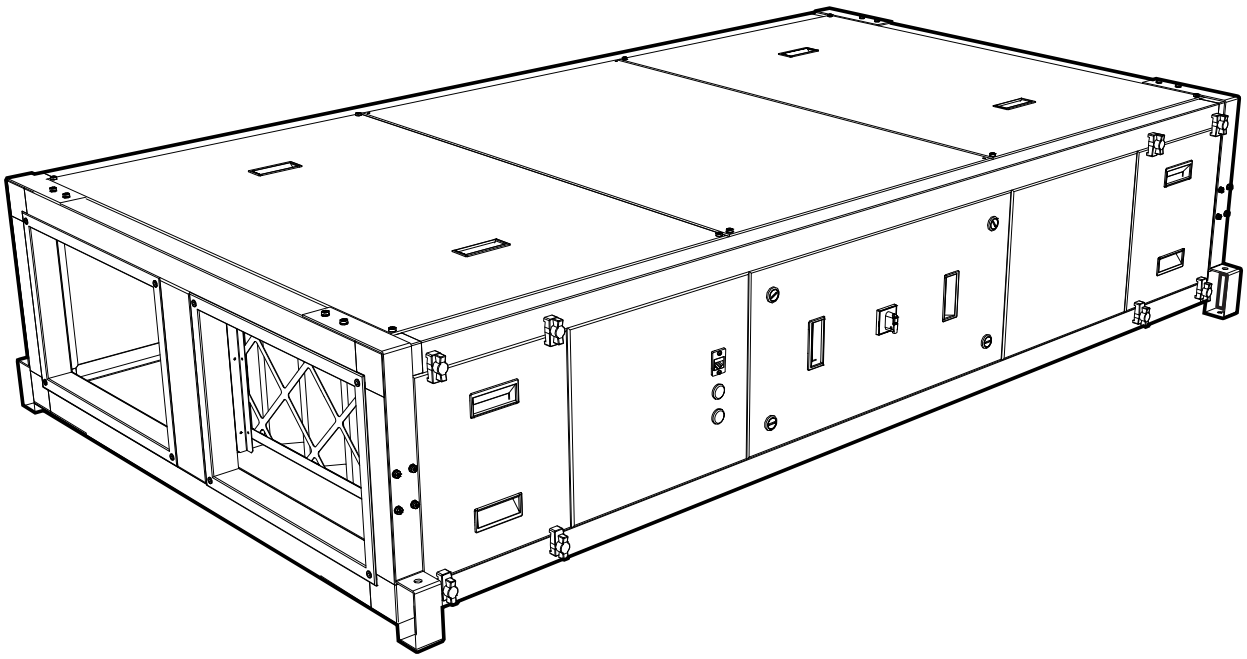

ecovent®

Counterflow Heat recovery units

Operation & Maintenance Manual

VES

Eagle Close, Chandlers Ford Industrial Estate, Chandlers Ford, Eastleigh, Hampshire, SO53 4NF

Tel: +44 (0) 2380 46 11 50 email: info@ves.co.uk web: www.ves.co.uk

VES Ref. ID. VES-DSG-0036
Issue 03
August 2025
Original Instructions

Conventions

Important **This manual must be read in full before Installation, Operation and Maintenance of the units supplied**

Please ensure that this document is passed to the end user. This manual forms an integral part of the product and should be kept for the working life of the product. Additional copies of this and supporting documents are available by contacting VES or by visiting **www.ves.co.uk** and following the 'Download O & M's' link.

The following symbols used within this document refer to potential dangers, advice for safe operation or important points of reference

Warning Indicates hazards associated with electric current and high voltages

Caution Indicates hazards that require safety advice for personnel or potential unit/property damage

Important Indicates important information

Contents

		page
1	Introduction	2
2	Nomenclature	3
3	Receipt of Goods & Handling	4
4	Installation	4
5	Standard Wiring & Fan Installation	11
6	Maintenance	18

Introduction 1

The **ecovent**® counterflow series is a range of Heat Recovery units, with duties up to 0.8 m^3/s. Suitable for either plantroom, ceiling void or internal locations. As standard, each unit will have been supplied pre-wired to an isolator or fitted control panel, as specified at the time of order.
The standard operating temperature of these units is -20 to +35 °C.

For further technical details regarding dimensions and weights, contact VES on **023 8046 1150**, quoting the sales order (SO) number and the unit type as found on the unit nameplate, or alternatively visit **www.ves.co.uk**.

Nomenclature 2

Part Number Coding

	Point Description	Point Variants	Details (as appropriate)
1	Product	**EV**	**ecovent®** Heat Recovery Units
2	Heat Recovery type	**C**	Counterflow plate heat exchanger
		CA	Counterflow Adapt Series *See O&M ID.1309*
		CB	Counterflow plate heat exchanger (2018)
		CH	Counterflow Healthcare Specification (2024)
3	Unit Size	**0...5**	Sequential see unit outline for details
4	Fan Type	**4...12**	Centrifugal EC fan
5	Fan Size	**2...7**	Sequential
6	Phase	**-1**	230V 50Hz Single Phase
		-3	400V 50Hz Three Phase
7	Unit Configuration	**/FP**	Flat Plantroom
		/SP	Stacked Plantroom
		/FW	Flat Weatherproof
		/SW	Stacked Weatherproof
8	Main Heating	**Null**	No Heating
		-E	Electric Heater Battery
		-W	LPHW Coil
9	Infill	**/DS**	25mm double skinned
		/EE	50mm double skinned
10	Handing	**/LT**	Left/Top Access
	(denotes position of	**/RT**	Right/Top Access
	supply airflow LIDSAF)	**/LB**	Left/Bottom Access
		/RB	Right/Bottom Access
		/L	Left (stacked)
		/R	Right (stacked)
11	Main Filter	**Null**	No filter
		/G4	G4 (Coarse 65%) Pleated filter *
		/F7	F7 (ePM 1 55%) Rigid Pleated Filter *
12	Control Panel Section	**/CPSC**	Fitted control panel
		/ISC	Fitted isolator/speed controller
		/QMX01 **	Fitted controls suitable for QMX (sequential)
13	Colour	**Null**	Galvanised finish
		/R7004	Powdercoated finish, RAL7004 etc...
14	Powder Coat Type	**Null**	As colour
		/IT	Internal powdercoated only
		/BT	Internal/External powdercoated
15	Special	**/S**	Special (non-standard) Unit

** BS EN ISO 16890 classification*
*** For confirmation of the room interface please see the accompanying documentation*

Typical Example EVC152-1/FP-W/EE/RT/G4/CPSC/S

EV	C	1	5	2	-1	/FP	-W	/EE	/RT	/G4	/CPSC			/S
1	2	3	4	5	6	7	8	9	10	11	12	13	14	15

Receipt of Goods & Handling 3

Immediately upon receipt of goods, check for possible damage in transit paying particular attention to fan impellers, coil connections and unit casing. Prior to installation please check to ensure alignment and smooth rotation of the impeller after transit. Also check to ensure that any ancillary items are included. These will normally be supplied fitted or, in the case of small items, taped to the unit.
In the event of any damage having occurred or if any item is found to be missing, it is essential to inform VES Andover Ltd. within **7 days** of delivery quoting sales order number and the unit type, as found on the unit nameplate. After this period, VES would be unable to accept any claim for damaged or missing goods.

Installation 4

The entire system must be considered for safety purposes and it is the responsibility of the installer to ensure that all of the equipment is installed in compliance with the manufacturer's recommendations, with due regard to the current HEALTH AND SAFETY AT WORK ACT and conforms to all relevant statutory regulations.
Where a unit is installed so that a failure of components could result in injury to personnel, precautions should be taken to prevent such an injury. If the unit is installed where there is a reasonable possibility of persons or objects coming into contact with the impeller whilst operational, a guard should be fitted or steps taken to prevent this. It is the installer's responsibility to ensure that access panels are not obstructed in any way and safe working access for maintenance must be provided in accordance with Health and Safety and Building Regulations. For confirmation of required access please see the appropriate unit outline drawing.
Consideration must also be given by the installer for adequate illumination of the unit location in order for safe maintenance. Further consideration should be given to the unit's position and secured into place as appropriate. This is especially important with external mounting as the wind and elements may effect the overall stability and safety of the unit.

Caution ⚠ Mounting hangers, door furniture, isolators etc. extend beyond the casework and so are vunerable to accidental damage. Take necessary precautions so as not to cause damage whilst handling the unit.

The weight of each unit/section is specified on the outline drawing and the total unit weight will be displayed on the unit inspection label. When lifting the unit using a fork lift truck ensure the whole unit is supported by the full length of the forks. It may be necessary to use fork extensions to fully support the unit properly. The centre of gravity may be offset from the centre of the unit; this needs to be taken into consideration when lifting the unit.

Fork Lifting Detail
Fig. 1

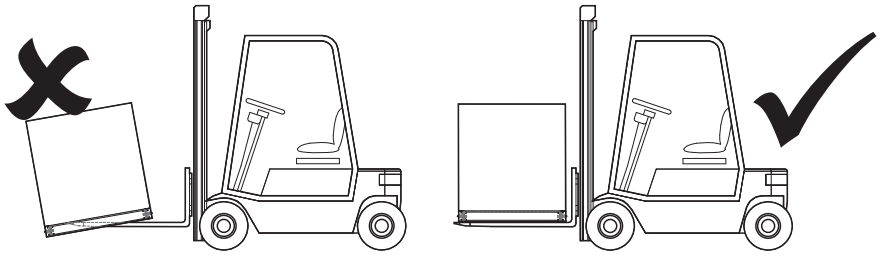

Caution ⚠ Handle with care. Failure to fully support the unit during lifting may result in damage to the unit casework Handles, lids, housings and coil connections must NOT be used as lifting points.

Lifting Detail
Fig. 2

Units are to be rigged and lifted using spreaders, taking into account the weight of the unit, and lifting gear should be arranged so as not to bear on the casework see right.

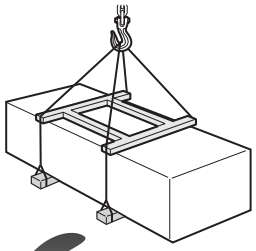

Installation 4 Continued

ecovent® counterflow units are supplied with feet suitable for floor or ceiling-void mounting, either by use of drop-rod mounting, in either top or bottom access orientation, with airflow in the horizontal plane. For alternative mounting please consult your outline drawing as supplied with the unit, or refer to VES Customer Services for further information.

Secure drop rods/unit with the appropriate fixings as shown below 3 .
Self-levelling feet are available for floor mounting, with fixings as per drop rods 4. The unit can be further secured to the floor via knockout fixings holes on the feet, fixings to be supplied by others. Weatherproof units feature 100mm stand-off feet. 5 These can be secured in a similar way.

Unit mounting detail
Fig. 3 4 5

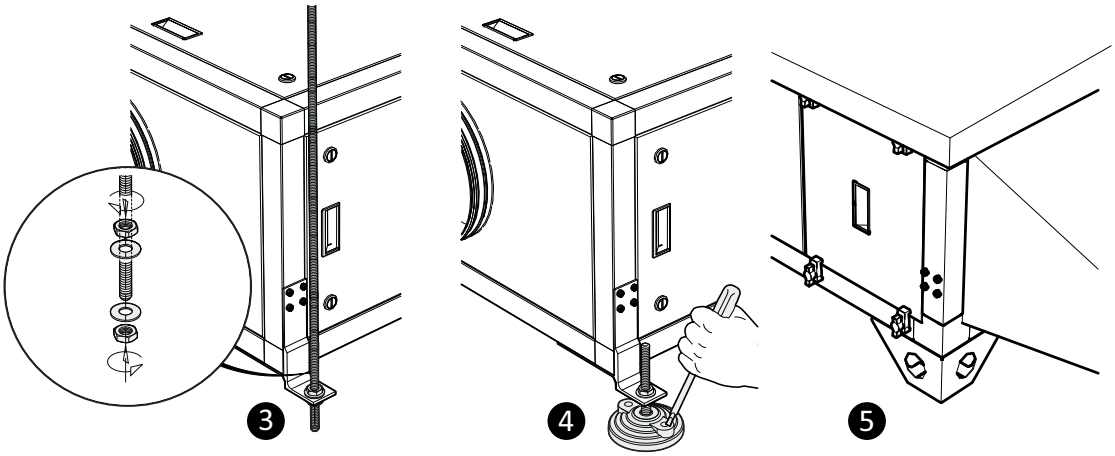

Important

When hanging units from drop-rods, ensure that the load is evenly spread and that **ALL** feet are used within the support, including those for fitted silencers if included.
Ensure that the drop rod used is selected appropriatedly to accomodate the load of the unit.

ecovent units with fitted ancillaries are sectional and handed. It is important that all sections are joined together securely prior to positioning and installation. Remove and retain the fixings from the joining bracket. Butt the correct silencer to the unit section ensuring the unit spigots enter the silencer section fully see fig. 6. This joint should be assembled using self-adhesive rubber tape at the joints prior to assembly so as to prevent air leakage; replace with similar if damaged. Finish the assembly by installing the joint fixings through both parts of each joining bracket and tighten using a 6mm hex key, drawing the sections together evenly see fig. 7.

Section joining detail
Fig. 6 7

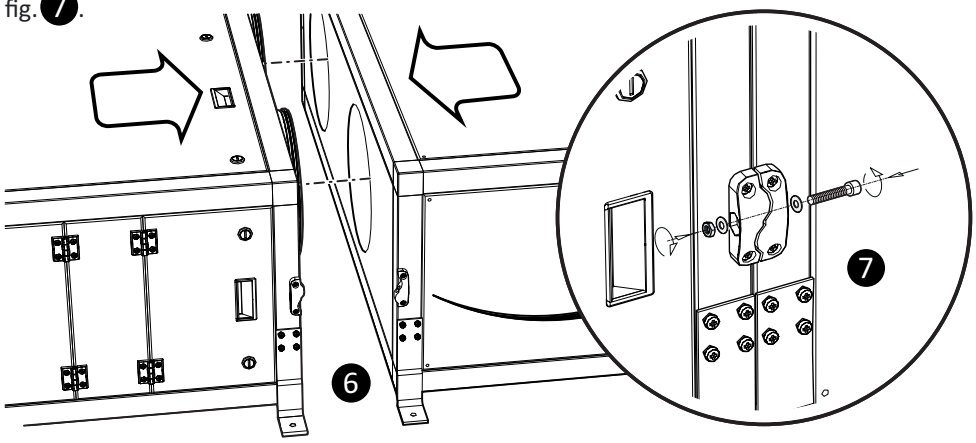

Caution

Joining brackets are **NOT** structural and are included as part of the unit sealing only.
When moving assembled units ensure that **ALL** sections are fully supported.

Installation 4 Continued

Weatherproof ecovent® counterflow units feature removable bolt-on cowls. This allows for the fitment of attenuators, ductwork and similar. The end of the extract section features a blanking panel which can be used to replace the redundant exhaust cowl.
Remove the four M6 fixings holding the cowl flange in place and reposition/replace as required.

Important To avoid possible cross contamination, ensure there is **adequate separation** between the supply and exhaust cowls.

Repositioning Weathercowls
Fig. 8

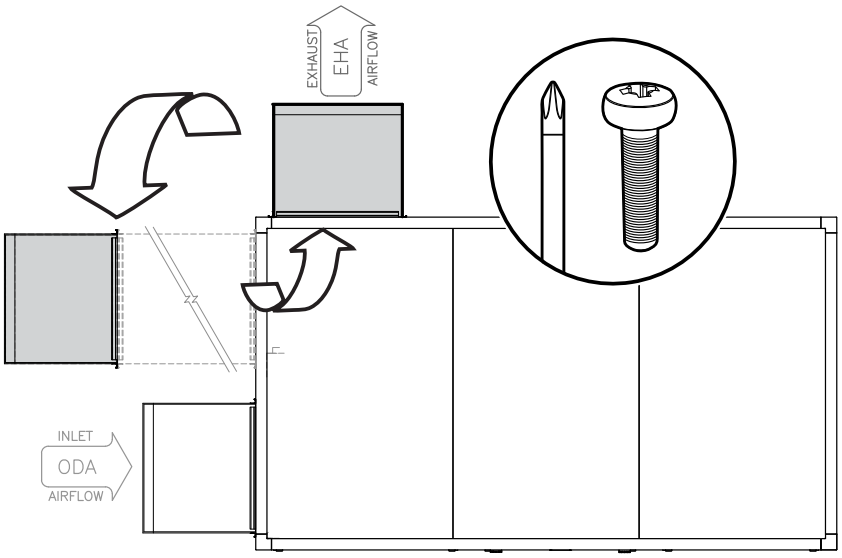

Weatherproof **ecovent®** counterflow units also feature removable lift-off **weatherlids**.
These lids provide access to larger internal components such as fans. The lids are designed in sections to facilitate handling.
The lids are securely attached to the main unit using hex setscrews, located along a concealed angle under the edge of the lid. Please ensure to remove, keep, and replace ALL fixings when removing the **weatherlids**.

Important Exercise caution when lifting the lids, as it may require the assistance of more than one person to do so safely.

Caution Please make sure to replace Weatherproof Lids correctly. Ensure that all fastenings are completely secured, and leave the unit in a safe and stable condition.

Weatherlid fixings
Fig. 9

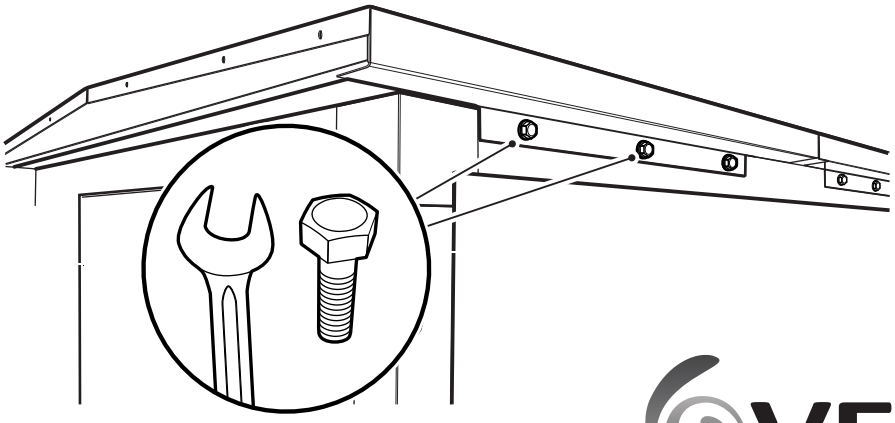

Installation 4 Continued

Access

Caution When accessing the unit ensure the access panels are handled/opened in a controlled manner so as to avoid damage to the unit or injury to personnel. This is particularly important with bottom access units. Ensure the AHU has been allowed to completely cool before attempting any work to the unit

Some units feature dual hinge/handles meaning access doors can be opened either way or removed completely.

Dual Hinge handle

Fig.10

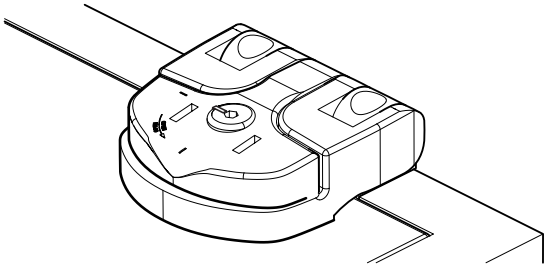

Each handle assembly features a lockable handle, secured as standard by an M4 Hex key. In order to open the hinges correctly the locks **must** be in the open position. This is clearly marked on the handle (see Fig. 11) ; failure to do this may result in permanent damage to the lock/handle mechanism.

Lock and release action

Fig.11 12

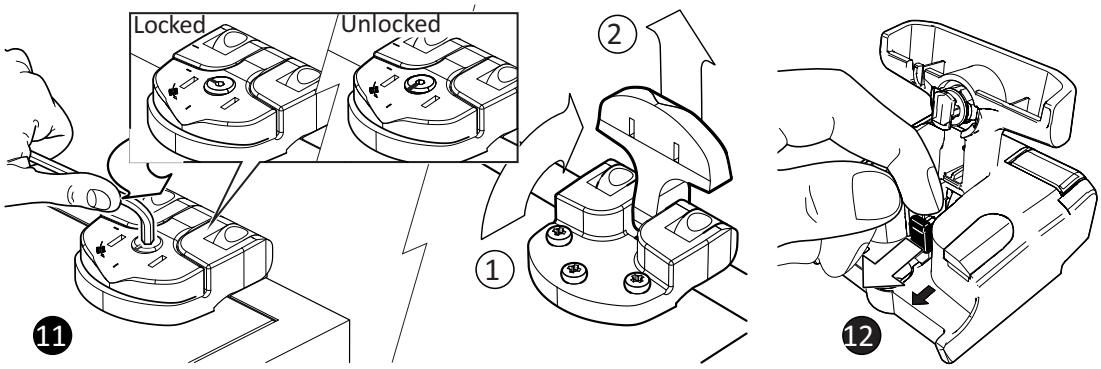

Caution Fan access doors that are fitted to fan sections with a high positive pressure feature a catch with a 2-stage pressure relief operation. As a safety measure these hinges require an additional action to open fully. De-press the lever as shown in fig.12

Access opening/removal options

Fig.13

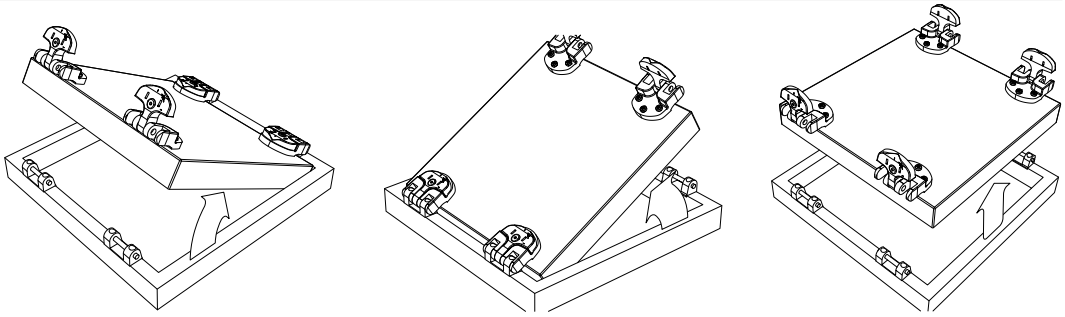

Caution When closing/replacing doors, ensure that all handles are fully closed and all locks are returned to the closed position.Take care with pressure relief catch action if appropriate.

Installation 4 Continued

Electric Heater Batteries

On **ecovent /-E** units, an electric heater battery (EHB) will be installed. Supply to the heater should be 1Phase or 3Phase with separate neutrals; confirmation of this can be found on the unit nameplate. Cables should be of silicone rubber, fibreglass or of a similar high temperature insulated type and be installed to current **I.E.T. Regulations**, ensuring a sufficient earth connection to the terminal provided. Care should be taken not to overstrain the terminal pillars as this may permanently damage the elements.

Caution

The heater is fitted with a manual-reset high temperature cutout with normally closed (NC) terminals and is set to break if the duct temperature rises above 130 °C.
It is important that the cutout is connected to the safety circuit so the heater is isolated in the event of overheating caused by airflow failure.

The electrical supply must be isolated before attempting to reset the manual cut-out and should be given sufficient time to cool. For further information regarding electric heaters please see **VES Ref. ID431**.

If a speed controller is fitted to the system, it must not stop the fan independently of the control system, or allow airflow to fall below the stated volume on the electric heater battery. Suitable speed controllers without on/off switches are available from VES Andover.

Coils

Coils should be piped according to any relevant local codes of practice. Where threaded connections are supplied, the only approved method of jointing method is by use of Boss white and hemp. The thread fitted to the coil is to be supported at all times whilst making joints. All external piping is to be supported independently from the coil. Fluid filters are recommended.

Caution

It is important that water and steam coils are protected against damage from extreme weather conditions during the winter season. If the water is allowed to freeze in the coil system, damage may occur potentially bursting pipes and resulting in emergency problems.
Fitting a frost thermostat at the unit inlet and ensuring that boilers run continuously in low ambient temperatures can help to prevent damage.

Caution

Heating coils do not cool immediately when the hot water supply is cut off. The residual heat must be dissipated to avoid damage. The continuous running of the fan after shutdown resolves this, by operation of a run-on timer.
The recommended length of run-on is **2 minutes minimum**.

LPHW Coils

On **ecovent/ -W** units, a Low Pressure Hot Water (LPHW) coil will be installed. The coils are normally suitable for LPHW at 80 °C flow and 60 °C return temperature (see the unit outline drawing for confirmation). LPHW coils are supplied as standard with an air vent and drain plug located on the pipe work immediately adjacent to the coil connections on the AHU. The air vent should be at the highest point, with the drain at the lowest. The coil should be regularly vented so as to avoid potential air locks, resulting in a fall in duty.

Typical LPHW Coil

Fig. 14

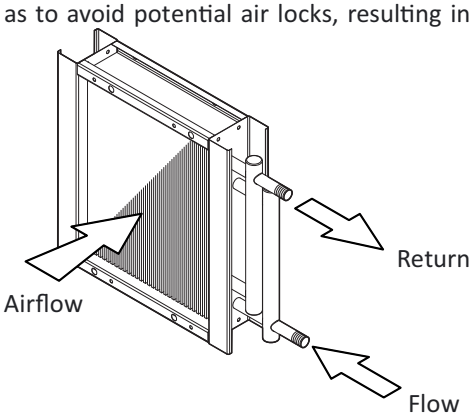

It is recommended that a check be made as to whether any treatment is required to the water supply for prevention of corrosion and scaling of the equipment. Information regarding the necessary action to be taken can be obtained from the relevant Local Water Supply Authority.
The unit will have been supplied with connections either left or right-hand side looking in direction of airflow. Please see order acknowledgement for confirmation of this handing. Should you need to alter this please consult VES as unit adjustment may invalidate your warranty.

Installation 4 Continued

Condensation

Caution

A drain pan is fitted within the exhaust section of all units and a peristaltic pump is fitted as standard for units size 0 to 4 and will require customer connection to an appropriate waste system from the pump outlet. **It is important that the unit be mounted level. Failure to do so may mean the pump sensor is not level and so compromise its operation.** The pump has been designed for use with water only.

As standard the position for the condensate outlet is on the nearest panel adjacent to the drain pan in the extract section. Should this position be inappropriate an alternate position is available on the opposite side of the unit. For further information regarding alternative condensate pipe routing please contact VES on **023 8046 1150** .

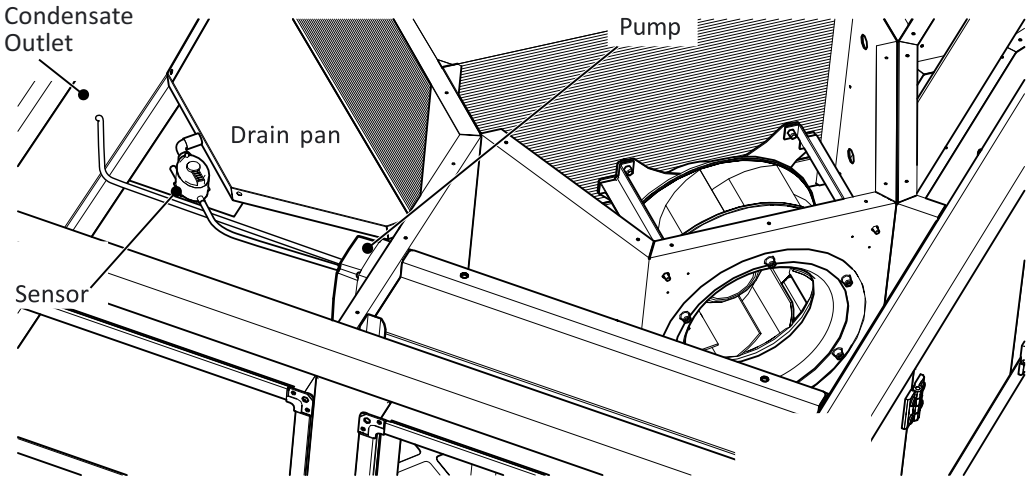

Drain pan connection (typical)

Fig. 15

Doors and panels removed for clarity

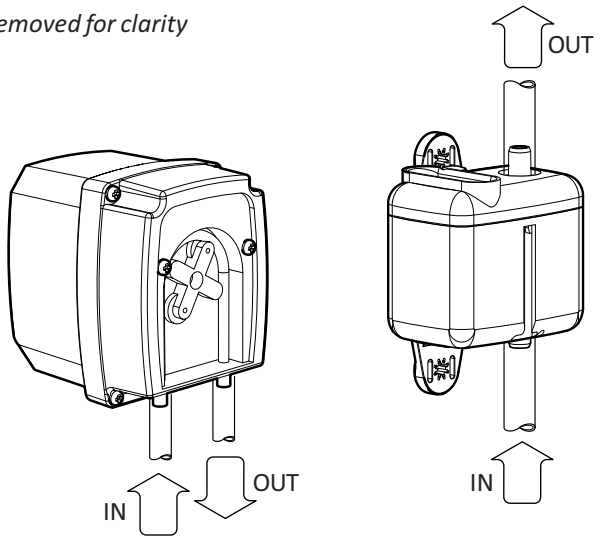

Typical Pump connections

Fig. 16

Before the unit is fully operational it is recommended to perform an initial test to confirm the pump and sensor are operating correctly. Ensure that all debris is removed from the condensate drainpan. Manually add enough water to the drain to ensure the pump sensor float switch is activated. Turn the unit on and check that pump starts and then stops as the water level decreases.

Installation 4 Continued

Condensation

For Size 5 EVC units and all other units not supplied with a perastaltic pump, connect the drain to an appropriate waste system ensuring the connection is trapped correctly using the traditional trapping method Fig.17. Consideration should be given to the height required for the trap to function correctly and that the unit may need additional base support in order to accommodate this correctly.

Typical trapping detail Fig.17

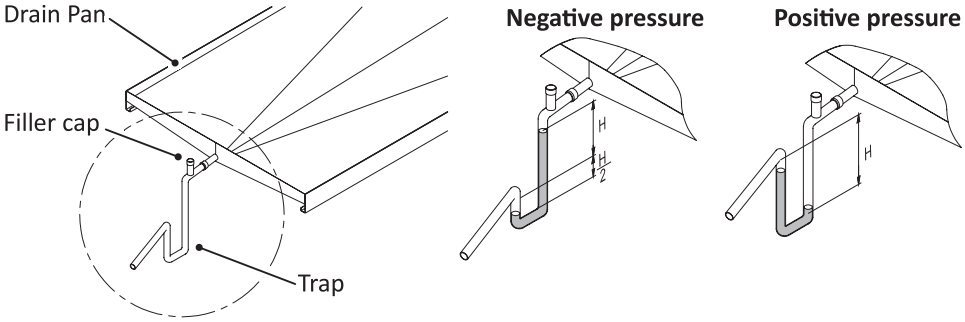

Drain pan fitted to a heat exchanger, diagrams show situation with fan operational.

Usually a negative pressure pan proceeds the fan section, a positive pressure pan follows the fan section.

Drain to open tundish as shown above.

DIM H = TOTAL STATIC PRESSURE mm Wg + S

S = SAFETY ALLOWANCE 25mm

Example: If H=250Pa (25mm) + safety allowance (25mm) = 50mm

The drain pan is fitted with an internal drain spigot suitable for connection with a Ø15mm push-fit straight connector, to be supplied by others. Terminate through the case onsite as required, ensuring that any swarf is removed and that the unit is sealed after connection. Should it be required to remove any component, ensure that it is replaced correctly

Typical Ecovent Drainpan Installation Fig.18

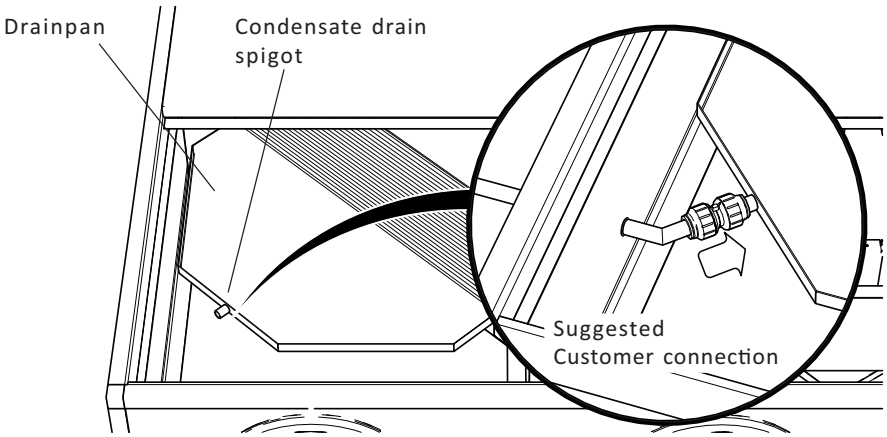

Caution

It is important that the drain be allowed to clear without obstruction. Ensure that the unit is mounted level and the drainpan is angled so that water drains towards the drain spigot as the drain may have moved during transit/installation.
Failure to do this may result in excess condensation within the unit and possible flooding.

Standard Wiring & Fan Installation 5

Warning

The electrical supply **must be fully isolated** before attempting to affect any work on this unit. All electrical connections to any unit must be carried out in accordance with the current edition of the I.E.T. Regulations, only competent Electricians should be allowed to affect any electrical work to our units.

Important

It is recommended that the cable entry point should be at the end of the control section as shown below in figure 19. It is the responsibility of the installer to ensure that a suitable cable gland (giving adequate protection and strain relief) is fitted, and in doing so also ensure that no internal components are damaged during this installation. Take particular care to note the position of the drain outlet and associated pipework. Make certain all swarf is removed before use.
It is the customer's responsibility to supply earth fault protection through the building installation device and a dedicated, isolated power supply with overload protection, to account for motor start up currents. See page 12 for specific fan details Fig. 21.

Warning

Do not connect any unit to an electrical supply voltage outside of the specification.

Important

For fitted ancillaries see the accompanying wiring diagrams for full connection details.

Recommended cable entry points

Fig. 19

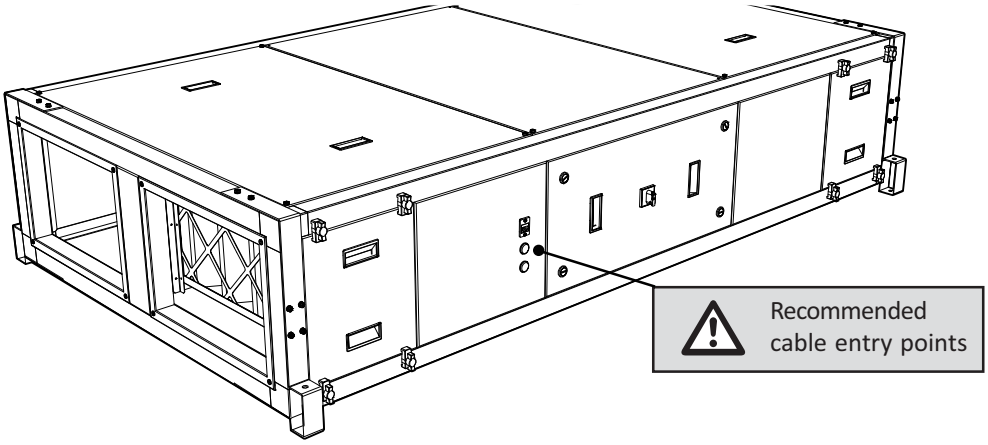

For units with fitted controls, they are supplied as a late-mounted panel located within the air handling unit. All units after 2018 feature an RJ45 socket at the cable entry point to enable connection of the control interface (HMI). This allows setup and commissioning of the unit to be carried out via a handheld HMI, which can be left connected or removed as required.

RJ45 Socket/HMI connection point

Fig. 20

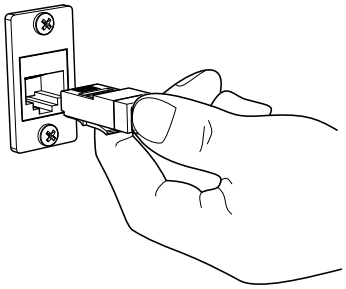

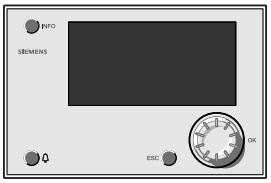

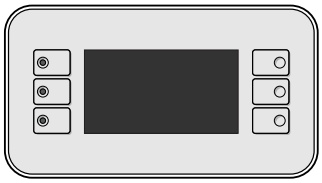

HMI examples

Standard Wiring & Fan Installation

5 Continued

The following wiring diagrams are a guide to installing the standard fan and actuator options found on **ecovent®** counterflow units. If in any doubt, for units with fitted VES controls or for special versions of the units, consult the wiring diagram in your document pack or contact VES Customer Services Department on **023 8046 1150** , quoting the sales order (SO) number and unit type as found on the unit name plate.
For incorrect fan rotation, check with the VES Service Department for advice, on **023 8046 1150** .

Standard Fan Details

Fig.21

	Size	Phase	Motor Size	Voltage	Fan Speed rpm	Full Load Current	Speed Control
EVC	EVC073-1	1	0.10 kW	230 VAC	1410	0.83 A	EC
	EVC152-1	1	0.17 kW	230 VAC	4120	1.35 A	EC
	EVC243-1	1	0.23 kW	230 VAC	3290	1.65 A	EC
	EVC262-1	1	0.50 kW	230 VAC	3000	2.60 A	EC
	EVC362-1	1	0.50 kW	230 VAC	3000	2.60 A	EC
	EVC445-1	1	0.40 kW	230 VAC	2010	2.10 A	EC
	EVC446-1	1	0.87 kW	230 VAC	2200	4.50 A	EC
EVCB	EVCB074-1	1	0.10 kW	230 VAC	1410	0.83 A	EC
	EVCB174-1	1	0.10 kW	230 VAC	1410	0.83 A *	EC
	ECVB262-1	1	0.50 kW	230 VAC	3000	2.60 A	EC
	EVCB385-1	1	0.56 kW	230 VAC	2100	2.80 A	EC
	EVCB485-1	1	0.56 kW	230 VAC	2100	2.80 A	EC
	EVCB4125-3	3	2.40 kW	400 VAC	4020	3.80 A	EC

* Per fan, 2 fans per airstream

EVCH	EVCH262-1	1	0.50 kW	230 VAC	3000	2.60 A	EC

Standard Wiring & Fan Installation

Standard Isolator arrangement Fig. 22

5 Continued

Customer Connections

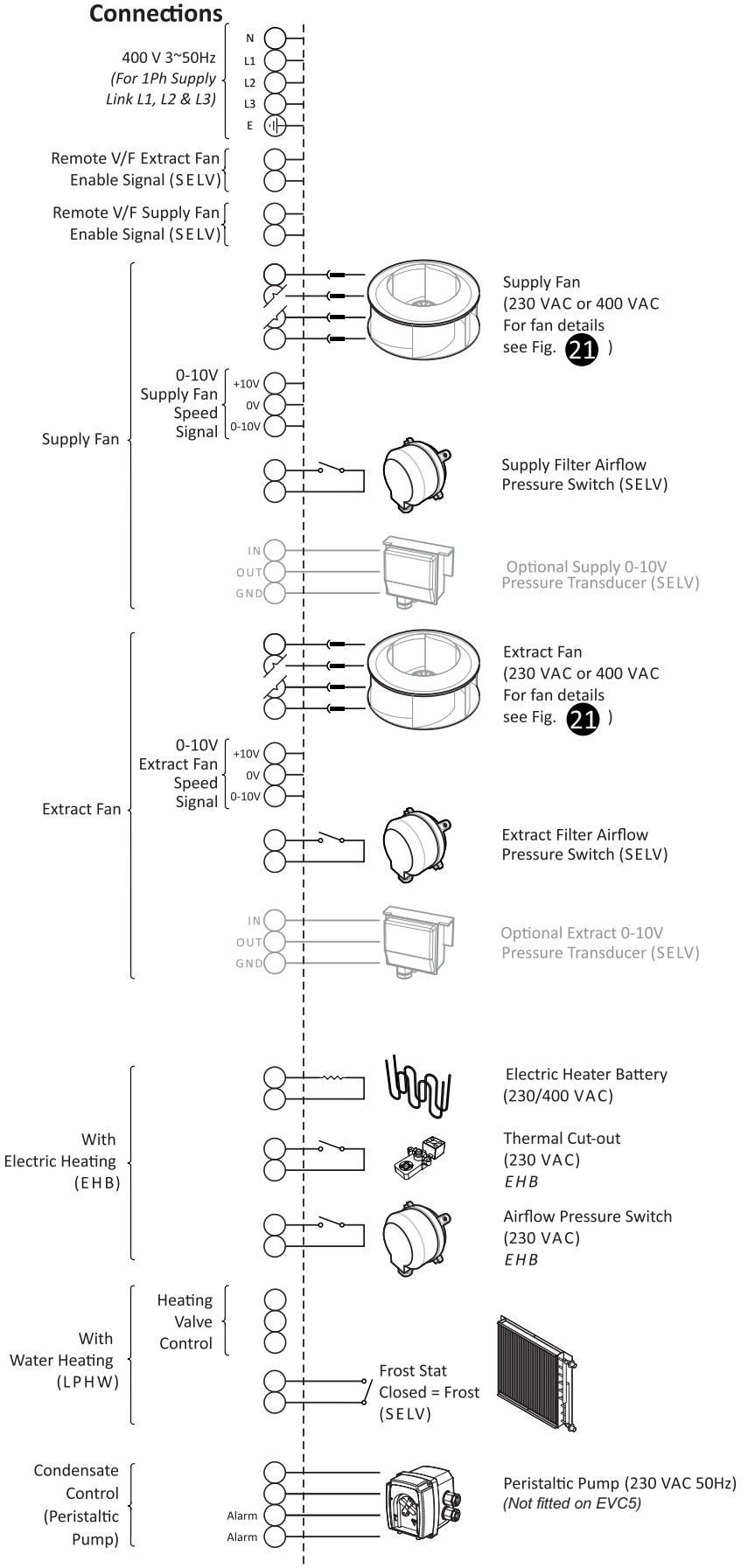

Standard Wiring & Fan Installation 5 Continued

Standard Control Panel Arrangement Fig. 23

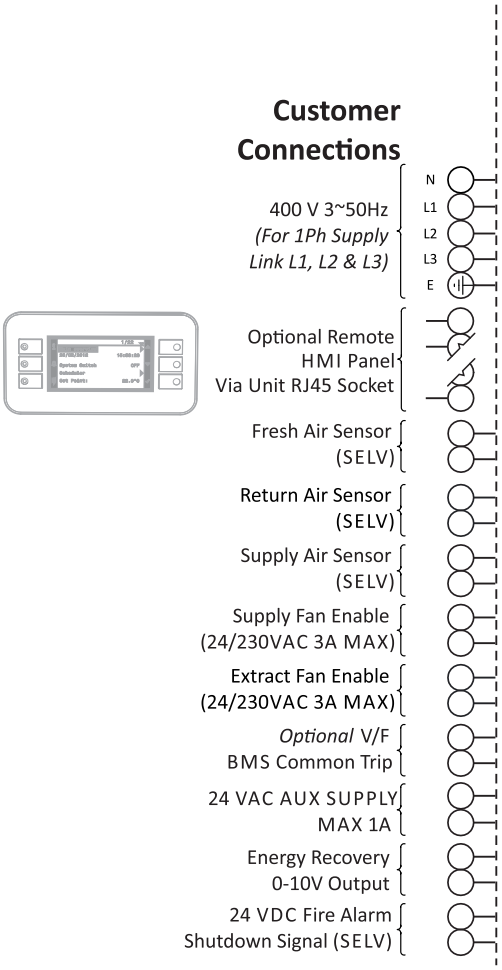

Continued over on page 14...

Standard Wiring & Fan Installation

Standard Control Panel Arrangement Fig. 24

5 Continued

Continued from page 13..

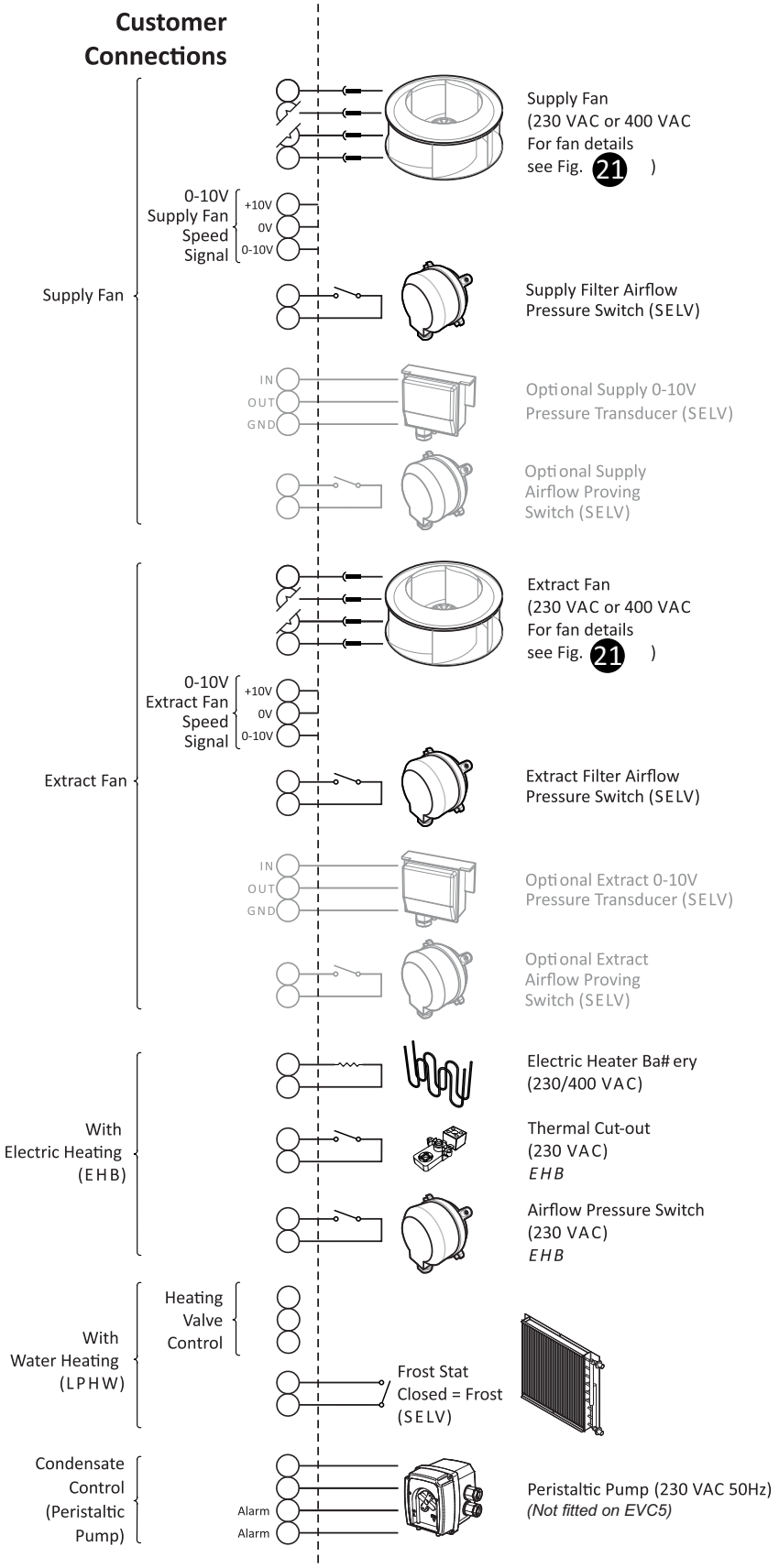

Standard Wiring & Fan Installation 5 Continued

Standard wiring arrangement Valve Actuator Terminals
Fig.25

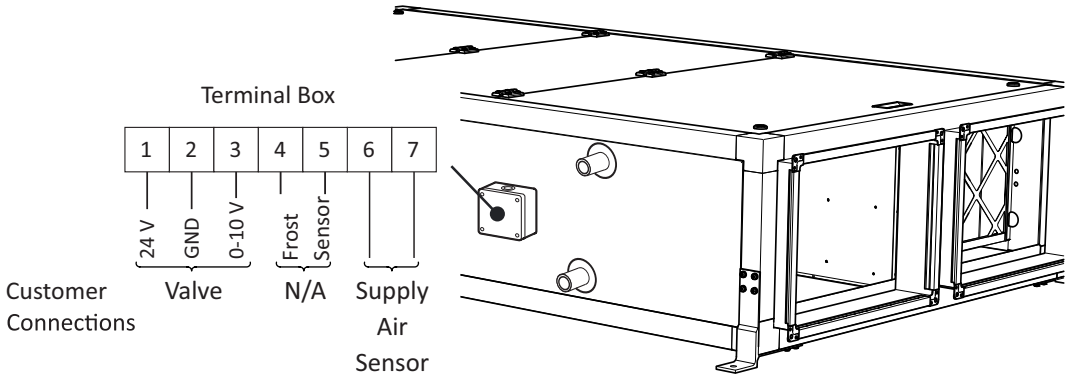

Warning

SGS65... Valve Actuator
To isolate from the main power supply, the system must incorporate a device which disconnects all the phase conductors

Fan alignment details
Fig. 26

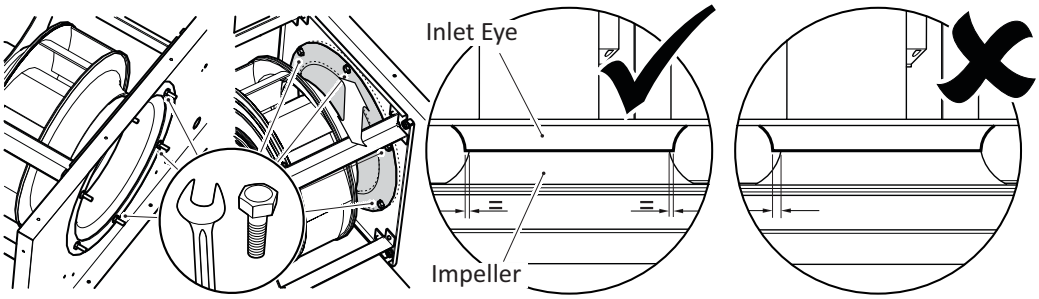

Important

Prior to starting the unit it is important to ensure that the fans are free running, and should any components have moved during transit take care to ensure they are realigned to allow correct operation/rotation. A trial spin by hand should indicate if the fan is rubbing. To align, loosen the fan inlet eye fixings and adjust the postion so that the gap between inlet and fan are equidistant. Ensure the fan runs freely in the new position, retighten the fixings, holding the inlet eye in postion see figure 26 above. The same should be applied to any wiring looms which may have become unfastened; ensure that loose wiring is securely stowed away from any moving components.
The impellers on EVC0/EVCB0 and EVCB1 units are not adjustable; any alignment issues should be reported to VES.

Standard Wiring & Fan Installation

5 Continued

ecovent® counterflow Units (EVC 2 to 5 and EVCB 2 to 4) feature tapped inlet rings. It is possible to establish the volume flow rate by measuring the static pressure rise into the fan.
The centrifugal fans have infinite speed adjustment, the benefits of real energy savings are apparent when the fan speed is reduced; this is best demonstrated when used in conjunction with additional sensors such as air quality or occupancy.

Using a micro manometer and adjusting the fan speed it is possible to commission each fan to the required air volume. Each fan section has a differential pressure tapping connection point; by connecting your micro manometer to the appropriate pitot a differential pressure reading can be taken. This measurement can then be applied to the calculation as below or by using the differential pressure curve. Simply read across from the pressure measurement to the fan curve and down to calculate the resultant air volume. If the unit features a fitted control panel this action can be undertaken within the programming available; see the accompanying controls documentation for further operational details.

Example: Measured differential pressure: 150 Pa

Differential pressure calculation Fig. 27

This measurement can then be expressed in the following calculation:

$$q_v = (k \cdot \sqrt{\Delta p_w}) / 3600$$

where q_v is the air volume in m³/s
k is the fan nozzle coefficient (See Below Graph)
Δp_w is the measured differential pressure in Pa

Measured differential pressure: 150 Pa
$q_v = (142 \sqrt{150}) / 3600$
$q_v = (142 \times 12.247) / 3600$
$q_v = 1739 / 3600$
q_v = air volume = 0.48 m³/s

Differential pressure curve Fig. 28

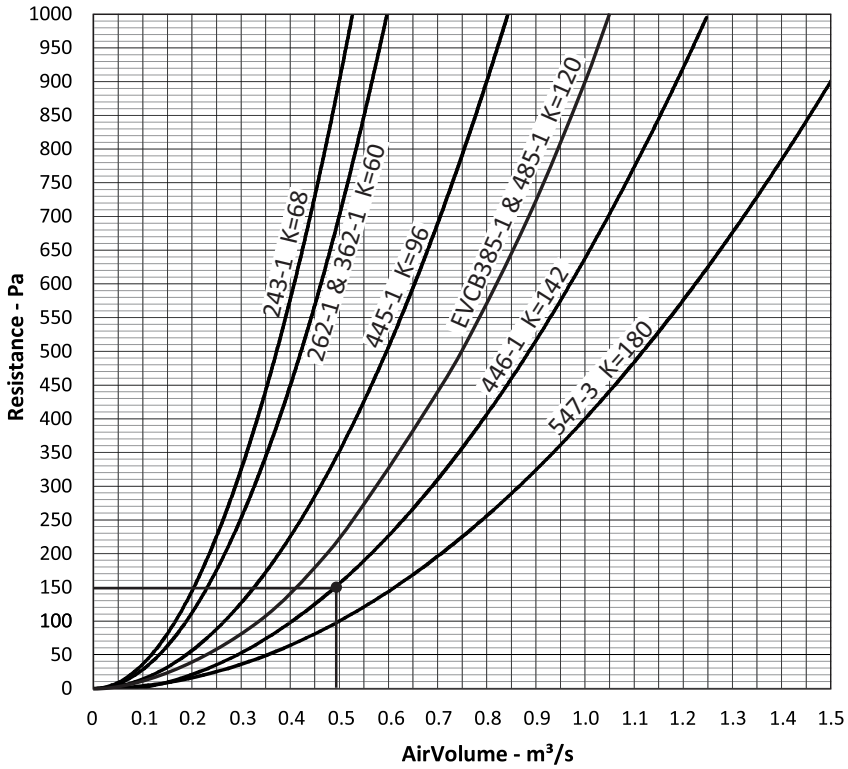

Example: Measured differential pressure: 150 Pa
Air Volume: 0.48 m³/s

Maintainance 6

Important

Before attempting to carry out any work on our units, all accompanying documentation including warning labels on the unit must be referenced.
Should it be necessary to remove any component ensure that these are secured into position once reinstalled. It is critical that after any maintenance work has been conducted that all components removed/replaced be refitted correctly by a competent engineer.

Warning

Before attempting to carry out any maintenance work, investigative or repair work on our units, the unit **MUST BE COMPLETELY ISOLATED** from its electrical supply. Ensure a minimum of two minutes after electrical disconnection before removing access panels. This will allow any moving parts to come to a rest.
Care should also be taken when accessing external units as the wind and elements may cause moving parts to 'windmill'.

In general, this series of units require little maintenance. In the unlikely event of component failure, spares are available from stock at VES Andover Ltd.

Caution

When accessing the unit ensure the access panels are handled/opened in a controlled manner so as to avoid damage to the unit or injury to personnel. This is particularly important with bottom access units. Ensure the AHU has been allowed to completely cool before attempting any work to the unit
For units featuring dual hinge/handle access, please see page 6 for further details

Important

Access to the fans and other internal components on weatherproof units normally requires the removal of the weather lids. Instructions for this procedure can be found on page 6.

For bottom access units, should it be necessary to remove the heat exchanger and/or drainpan assembly from the unit casework take care to ensure that all components are correctly supported during their removal. Remove lids from the unit, exposing the key components. Damper and bypass assemblies are held into position using M6 fixings. Remove the required components with care and ensure that all components are replace correctly.

ecovent® counterflow units feature plug & socket connections to allow easy removal/replacement of key components. Separate the plug connection by hand by pressing the top/bottom clasp mechanism to open

Plug & socket operation
Fig. 29 30

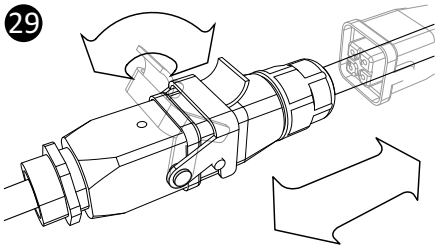
29

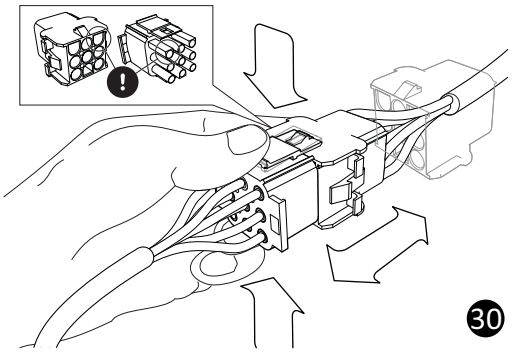
30

On reconnection, the assembly features a locating lug to ensure correct orientation. Once rejoined, lock the connection together again using the corresponding system as shown.
Note the plugs are handed and forcing an incorrect connection may result in damage to the plug.

Maintainance 6 Continued

Plug & socket operation
Fig. 31

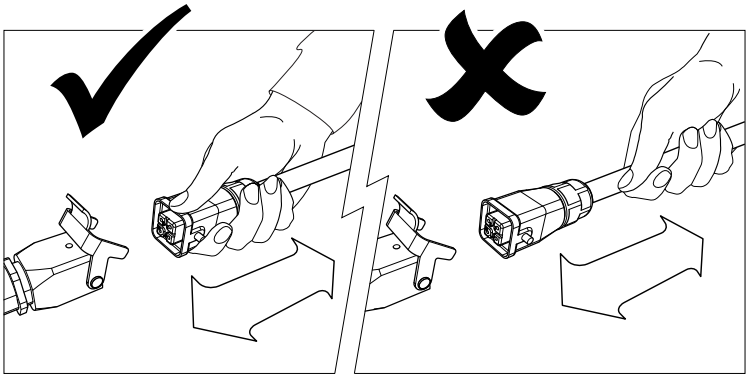

Caution Gently pull apart holding the plugs to separate, **DO NOT** pull the cable to separate the assembly.

Important **ecovent**® counterflow units feature a bulkhead-mounted fan plate assembly. Ensure that special care is taken when removing/replacing components/assemblies from bottom-access units. For larger components this may require the use of two or more persons. The mounting plate is slotted to aid plate alignment. It is important to keep the fan assembly supported at all times; the fan assembly should not be considered supported until all fixings are securely tightened.

Caution For access to fans within weatherproof units please see page 6 for details. Please make sure to replace Weatherproof Lids correctly. Ensure that all fastenings are completely secured, and leave the unit in a safe and stable condition.

Fan assembly removal/ installation
Fig. 32

To remove the fan assembly Fig. 32, ensure the unit is fully isolated. Separate the supply plugs to the fan as shown above 29 30 . (1) Detach the measuring tube from the inlet ring and stow the tube clear. (2) Back-out the bottom screws but do not remove . (3) Remove the top fixings completely and retain . Carefully lift the fan assembly over the retained fixings and remove the fan assembly from the unit.

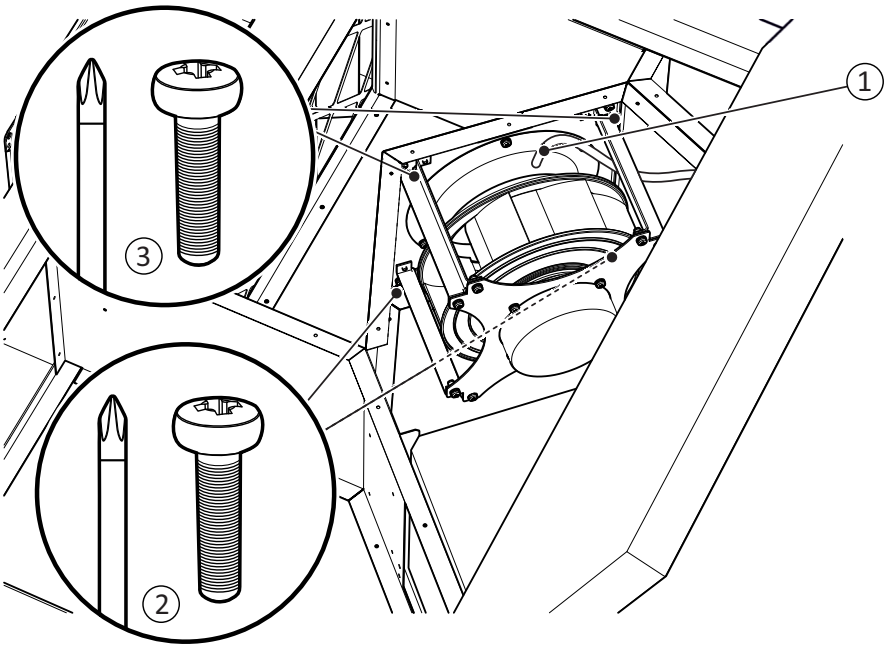

Maintainance 6 Continued

To replace the fan assembly, ensuring the pitot tapping on the fan inlet ring is accessible, locate the mounting plate over the fixings retained in the unit bulkhead. (2) (3) Secure the loose fixings through the mounting plate and tighten all the mounting fixings. (1) Attach the measuring tube to the pitot tapping on the inlet ring ensuring that it is clear of all moving parts. Reconnect the supply plugs as in Fig. 29 30 ; if more than one plug is used, ensure the correct plugs are reconnected as marked.
Ensure that the fans are free running by following the fan alignment instructions on page 14, adjust as required.

EVC0, EVCB0 and ECVCB1 units feature a double inlet centrifugal fan mounted on an adapter plate.To remove, unplug as per Fig. 33 undo the two screws and carefully remove the fan/ adapter plate assembly, retaining all fixings.

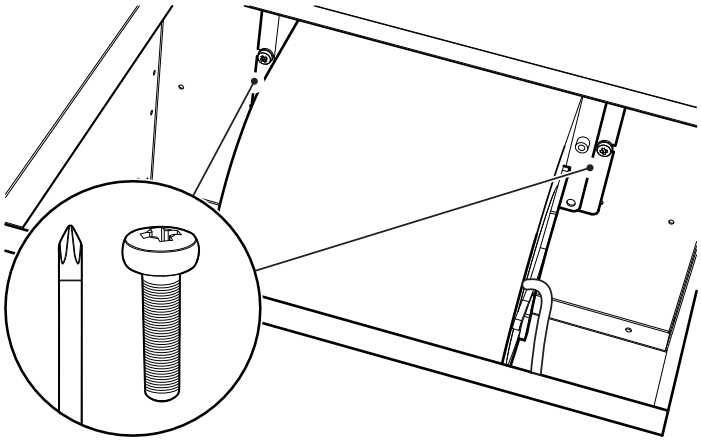

Fan assembly removal/ installation (EVC0/EVCB0/EVCB1) Fig.33

To replace the fan assembly, secure one fixing leaving enough of a gap to allow the adapter plate to slide into place. Fit the remaining fixing and tighten both. Ensure the impellor is free running. Reconnect the supply plugs as in Fig.29 30 ; if more than one plug is used, ensure the correct plugs are reconnected as marked. There is no pitot on this fan assembly.

EVCB4 units feature side access/withdrawl for fan access. Carefully remove the side fan access doors and remove as figure 34. The supply fan requires the removal of a secondary internal cover plate to gain access.
Ensure that all removed panels/plates and components are refitted correctly before restarting the unit.

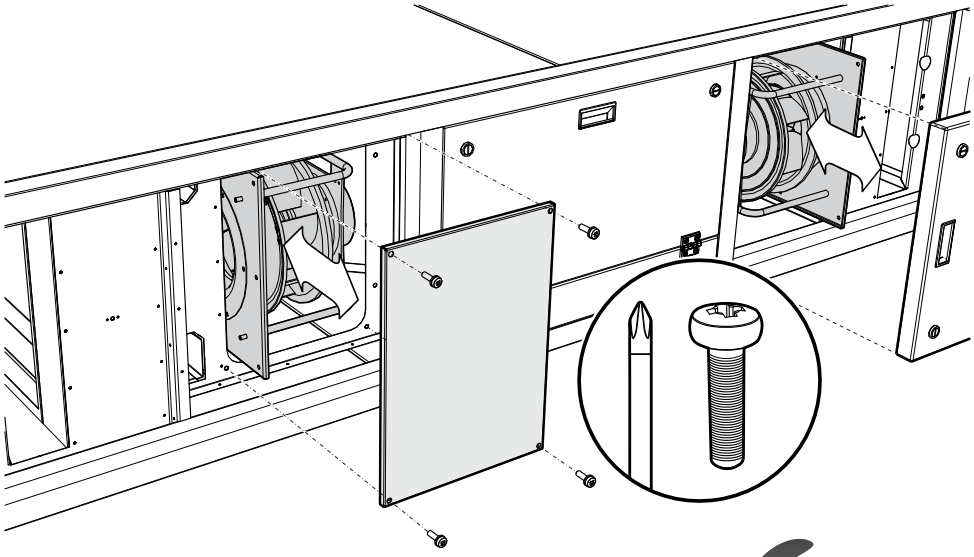

Fan assembly removal/ installation (EVCB4) Fig.34

Maintainance 6 Continued

ecovent® counterflow units feature dual access to filters. Depending on the handing and location of the unit this is typically side and top/bottom.
For Bottom access, follow the instruction below. The same can be applied for top access except for actions in the different mounting plane.

Bottom Filter Withdrawl
Remove Bottom Access
Fig.35

Carefully remove the required bottom access panels. Ensure the panel is fully supported during this action and retain all fixings to reinstate later

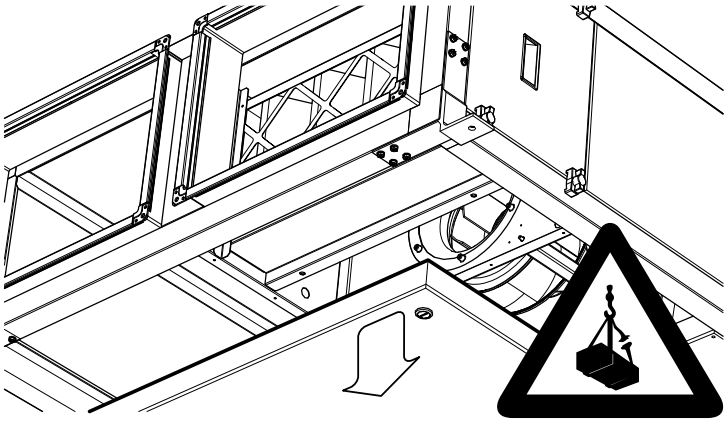

Bottom Filter Withdrawl
Remove Filter Support Channel
Fig.36

Remove the two fixings holding the bottom filter support channel and clear from the unit.

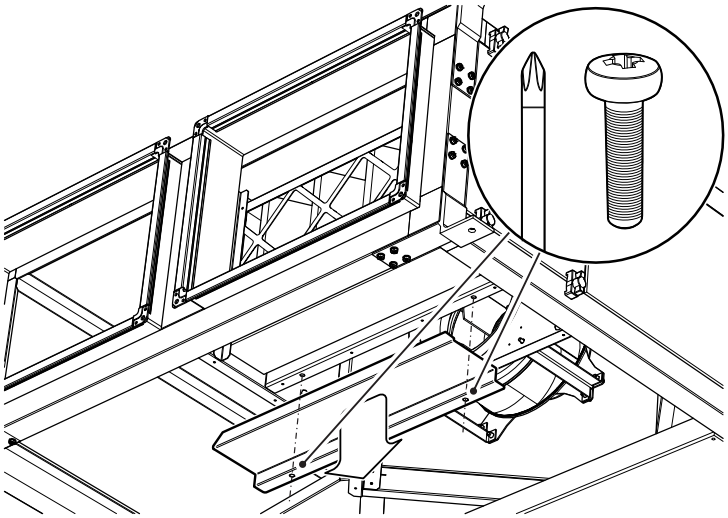

Bottom Filter Withdrawl
Filter Removal
Fig.37

Slide the old filter out of the unit, taking care with any loose dirt and replace with a new clean filter, taking note of any air direction indication.

Replace the filter support channel and bottom access panels, making sure to use all fixings and leaving the unit in a safe condition.

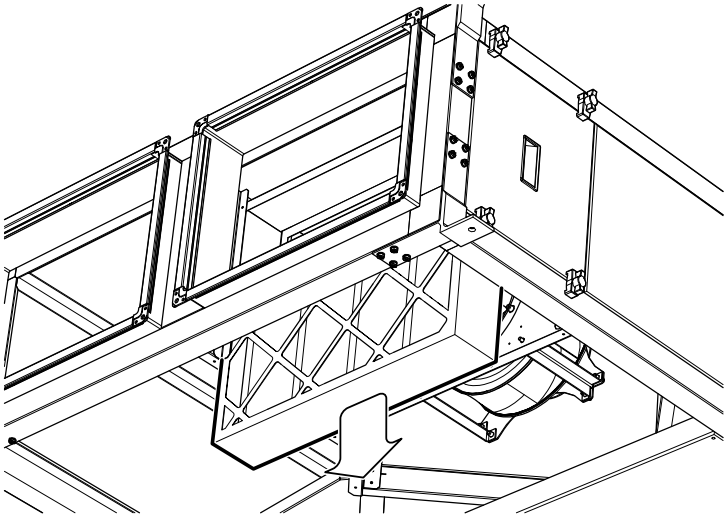

Maintainance 6 Continued

Recommended Checks

In order to keep the unit in good order the following maintenance routine is recommended:

Three Monthly Checks

Filters should be inspected every three months. If they are found to be heavily soiled or damaged in any way they should be replaced. A failure to replace filters periodically will result in a drop in arrestance efficiency and unit performance. Spare filters can be ordered from VES spares department.

Six Monthly Checks

The fan impeller should be cleaned every 6 months. Failure to clean the fan on a regular basis could result in loss of fan performance, or cause it to fall out of balance. If a fan is stationary for long periods in a humid atmosphere, it should be switched ON for minimum of two hours every month to remove any moisture that may have condensed within the motor.
The fan motors are maintenance free due to the use of ball bearings with 'life-long lubrication'.
At the end of the grease life it will be necessary to change the bearings or change the fan unit. The life expectancy of bearings for standard usage is approximately 30 - 40000 hours.
Failure to keep dampers clean could result in the damper becoming inoperative. Dry Clean damper blades and frames.
The heat exchanger matrix should be inspected for debris, dust or dirt build up. If found contaminated, foreign matter should be removed accordingly; superficial dust or debris can be removed from the surface of the heat exchange by gently brushing. Loosened debris can then be vacuumed from the surface of the matrix or flushed through with warm water. Stubborn deposits can be removed by using a low pressure washer with an approved detergent solution. The solution temperature should not exceed 50 °C. When using any pressure device care must be taken not to damage the heat exchanger matrix.

Caution Under NO circumstances should the heat exchanger be steam cleaned.

Ensure the drain pan and the drain connection is free from debris ensuring any condensate produced can freely drain away. Where a pump is fitted check the sensor and float for contamination. Clean as required using a 95 / 5% Water/Chlorine solution. Check also all associated pipework. Any found to be damaged or blocked should be replaced, spare replacement pipes being available from VES.
Should a full service be required it may be necessary to disassemble the unit casework to gain access to some components.

Twelve Monthly Checks

ecovent® counterflow units are supplied in both unpainted galvanised steel and also with an option for powder coat paint finish. Check all painted items to ensure that they have not deteriorated, particularly where adverse environmental conditions prevail. Re-paint as necessary.
Matching paint can be supplied upon request.

Spares & Repairs

When enquiring after or ordering spares contact VES Spares Department, quoting the sales order (SO) number and unit type as found on the unit nameplate.

Tel: (+44) 2380 461150

WEEE Directive

At the end of their useful life the packaging and product should be disposed of via a suitable recycling centre. Do not dispose of with normal household waste. Do not burn.

European Authorised Representative

Comply Express Unipessoal LDA
StartUp Madeira - EV141, Campus da Penteada, 9020-105Funchal, Madeira, Portugal

PLEASE ENSURE THAT THIS DOCUMENT IS PASSED ON TO THE END USER

ecovent®

Counterflow Heat recovery units

Operation & Maintenance Manual

©VES Andover Ltd. 2025
VES is a trading name of VES Andover Ltd.
Registered in England No. 02303719.
Registered Office as above.

Eagle Close, Chandlers Ford Industrial Estate, Chandlers Ford, Eastleigh, Hampshire, SO53 4NF
Tel: +44 (0) 2380 46 11 50 email: info@ves.co.uk web: www.ves.co.uk

VES Ltd,
Eagle Close, Chandlers Ford Industrial Estate,
Chandlers Ford, Eastleigh, Hampshire, SO53 4NF
+44 (0)23 8046 1150 | info@ves.co.uk | ves.co.uk

UK Declaration of Conformity

This declaration is issued under the sole responsibility of the product manufacturer.

Product:	Ecovent EVC_ Heat Recovery Units
Type:	EVC_
Manufacturer:	VES Andover Ltd.
Date:	22nd November 2022

The object of the declaration described above is in conformity with the relevant UK Statutory Instruments and their amendments:

2016 No. 1091	The Electromagnetic Compatibility Regulations
2008 No. 1597	The Supply of Machinery (Safety) Regulations 2008
2010 No. 2617	The ECODESIGN for Energy-Related Products Regulations 2010

We hereby declare that the product described above, to which this declaration of conformity refers to, is in conformity with the essential requirements of the following standards:

BS EN ISO 12100:2010	Safety of machinery - General principles for design - Risk assessment and risk reduction
BS EN ISO 13857:2019	Safety of machinery. Safety distances to prevent hazard zones being reached by upper and lower limbs
BS EN IEC 61000-6-4:2019	Electromagnetic compatibility (EMC) - Generic standards
BS EN 61000-3-3:2013+A2:2021	Electromagnetic compatibility (EMC)-Limits
BS EN 61000-6-2:2005	Electromagnetic compatibility (EMC). Generic standards - Immunity for industrial environments
BS EN 60204-1:2018	Safety of machinery — Electrical equipment of machines

Name:	**Signature**	**Position of Signatory:**
A. Reade		Director
J. Atack		Engineering Director

VES Ltd,
Eagle Close, Chandlers Ford Industrial Estate,
Chandlers Ford, Eastleigh, Hampshire, SO53 4NF
+44 (0)23 8046 1150 | info@ves.co.uk | ves.co.uk

EU Declaration of Conformity

This declaration is issued under the sole responsibility of the product manufacturer.

Product:	Ecovent EVC_ Heat Recovery Units
Type:	EVC_
Manufacturer:	VES Andover Ltd.
Date:	18th September 2024

The product above is produced in accordance with EC Council Directives:

2004/108/EC	The Electromagnetic Compatibility (EMC) Directive
2006/42/EC	The Machinery Directive
2009/125/EC	The Ecodesign Directive

We hereby declare that the product described above, to which this declaration of conformity refers to, is in conformity with the essential requirements of the following standards:

BS EN ISO 12100:2010	Safety of machinery - General principles for design - Risk assessment and risk reduction
BS EN ISO 13857:2019	Safety of machinery. Safety distances to prevent hazard zones being reached by upper and lower limbs
BS EN IEC 61000-6-4:2019	Electromagnetic compatibility (EMC) - Generic standards
BS EN 61000-3-3:2013+A2:2021	Electromagnetic compatibility (EMC)-Limits
BS EN 61000-6-2:2005	Electromagnetic compatibility (EMC). Generic standards - Immunity for industrial environments
BS EN 60204-1:2018	Safety of machinery — Electrical equipment of machines

Name:	**Signature**	**Position of Signatory:**
A. Reade		Director
J. Atack		Engineering Director